Strathmore UNIVERSITY

SU+ @ Strathmore University Library

Electronic Theses and Dissertations

2025

Leading during a crisis: leadership styles, fear and psychological capital as antecedents of the organizational resilience of Small and Medium sized Enterprises in Kenya.

Njaramba, Faith Njambi
Strathmore Business School
Strathmore University

Recommended Citation

Njaramba, F. N. (2025). *Leading during a crisis: Leadership styles, fear and psychological capital as antecedents of the organizational resilience of Small and Medium sized Enterprises in Kenya* [Strathmore University]. https://hdl.handle.net/11071/16182

Follow this and additional works at: https://hdl.handle.net/11071/16182

This work is availed for free and open access by Strathmore University Library.
It has been accepted for digital distribution by an authorized administrator of SU+ @Strathmore University.
For more information, please contact library@strathmore.edu

Leading During a Crisis: Leadership Styles, Fear and Psychological Capital as Antecedents of the Organizational Resilience of Small and Medium Sized Enterprises in Kenya

Njaramba Faith Njambi

062373

Submitted in Total Fulfillment of the Requirements for the Degree of Doctor of Philosophy in Business and Management at Strathmore University

Strathmore University Business School

Strathmore University

Nairobi, Kenya

June, 2025

This thesis is available for Library use through open access on the understanding that it is copyright material and that no quotation from the thesis may be published without proper acknowledgement.

Declaration and Approval

Declaration

I declare that this work has not been previously submitted and approved for the award of a degree by this or any other University. To the best of my knowledge and belief, the thesis contains no material previously published or written by another person except where due reference is made in the thesis itself.

© No part of this thesis may be reproduced without the permission of the Author and Strathmore University.

Name: Njaramba Faith Njambi

Signature: 

Date: 12th May 2025

Approval

The research thesis was reviewed and approved by the following:

Prof. Daniel Skarlicki

Professor, University of British Columbia, Sauder School of Business

Dr. John Olukuru

Senior Lecturer, Strathmore University Business School

Dr. Ceasar Mwangi,

Dean, Strathmore University Business School

Prof. Bernard Shibwabo,

Director of Graduate Studies, Strathmore University

Abstract

Leadership is critical for organizational resilience and can be especially important in a crisis. The present research examined how leaders within SMEs activate organizational resilience. This study aimed to evaluate the relationships between three distinct leadership styles—transformational, directive, and abusive (X)—and organizational resilience (Y). This relationship was examined through the mediating effect of employees' psychological capital (M), taking into account varying levels of employees' fear regarding COVID-19 (W). The final outcome was to develop a multilevel model that connects individual-level factors, such as leadership styles, psychological capital and fear, to organizational phenomena, specifically organizational resilience. This is based on the premise that individuals represent the acting entities in firms. This study used a quantitative cross-sectional survey research design to achieve its aim. Data were collected using structured questionnaires from a sample of 517 SMEs whose proportion was established through quota sampling technique. To enhance the accuracy of reliability estimates, the study included two employees from each SME, allowing for the simultaneous assessment by multiple raters. This approach resulted in a total sample size of 1,034 employees. These employees had a role in risk, crisis, emergency or business continuity and were selected purposively based on this knowledgeability criteria. Ethical considerations were followed throughout this study. Piloting, validation and verification was conducted to ensure data quality. 60 employees were involved in the pilot study to refine the research tool. A 58.22% response rate was achieved in the final study from 301 SMEs. Data were analyzed using descriptive statistics, correlation analysis and multilevel structural equation modeling. Internal validity was assessed using Cronbach's alpha and composite reliability (CR) tests. Convergent reliability was determined using average variance extracted (AVE) and discriminant validity was ascertained using heterotrait-monotrait ratio of correlations **(**HTMT). Content validity was enforced by using validated measurement scales. Model fit statistics were assessed using standardized root mean squared residual (SRMR) and root mean square error of approximation (RMSEA). The results revealed that transformational leadership and directive leadership styles were significant positive predictors of organizational resilience. Abusive supervision on the other hand was a significant negative predictor of organizational resilience. Additionally, fear of COVID-19 moderated the relationship between the three leadership styles and employees' psychological capital, such that the associations were stronger when fear of COVID was low versus high. Moreover, employees' psychological capital mediated the relationship between the three leadership styles and organizational resilience. The joint moderated mediation model showed that the interactive effect of directive leadership and fear of COVID-19 via employees' psychological capital had a significant positive relationship with organizational resilience. The same interactions for transformational leadership and abusive supervision were not significant. The finding underscores the significance of leadership style and highlights the crucial role of employees' psychological capital in mitigating the adverse effects of a crisis.

Table of Contents

Declaration and Approval ..... **ii**

Abstract ..... **iii**

List of Figures ..... **x**

List of Tables ..... **xi**

List of Abbreviations ..... **xii**

Acknowledgements ..... **xiv**

Chapter One **1**

Introduction **1**

1.1 Introduction 1

1.2 Background to the Study 2

1.2.1 Organizational Resilience 3

1.2.2 Leadership Styles 4

1.2.3 Employee Psychological Capital 7

1.2.4 Fear of COVID-19 8

1.2.5 Small and Medium Sized Enterprises in Kenya 9

1.3 Problem Statement 11

1.4 Research Objectives 14

1.5 Research Questions 15

1.6 Scope of the Study 16

1.7 Significance of the Study 16

Chapter Two **18**

Literature Review **18**

2.1 Introduction 18

2.2 Theoretical Framework 18

2.2.1 The Resource-Based View 18
2.2.2 Job-Demands Resources Theory (JD-R) 20
2.2.3 Transactional Theory of Stress and Coping 22
2.3 Empirical Review 23
2.3.1 Leadership Styles and Organizational Resilience 24
2.3.2 Leadership Styles and Employees' Psychological Capital 28
2.3.3 Employee Psychological Capital and Organizational Resilience 31
2.3.4 Moderating Role of the Fear of COVID-19 on the Relationship Between Leadership Styles and Employee Psychological Capital 32
2.3.5 Mediating Role of Employees' Psychological Capital on the Relationship Between Leadership Styles and Organizational Resilience 35
2.3.6 Moderated Mediation Effect of Leadership Styles on Organizational Resilience Through Employees' Psychological Capital Depending on Employees' Fear of COVID-19 38
2.4 Summary of Research Gaps 41
2.5 Conceptual Framework 48
2.5.1 Operationalization of the Study Variables 49
Chapter Three 52
Research Methodology 52
3.1 Introduction 52
3.2 Research Philosophy 52
3.3 Research Design 53
3.4 Population and Sampling 53
3.4.1 Population 53
3.4.2 Sampling 54
3.5 Data Collection 57

3.6 Data Analysis 58
3.7 Research Quality 62
3.8 Ethical Considerations 64
Chapter Four 65
Presentation of Research Findings 65
4.1 Introduction 65
4.2 Preliminary Analyses 65
4.2.1 Response Rate 65
4.2.2 SME Firm Profile Information 66
4.2.3 Respondent's Profile Information 69
4.2.4 Descriptive and Inferential Statistics 71
4.2.5 Correlation Analysis 83
4.3 Multilevel Modelling 85
4.3.1 Intra-class Correlation 85
4.3.2 Quality of the Measurement Model 86
4.3.3 Quality of the Structural Model 92
4.4 Leadership Styles and Organizational Resilience 93
4.5 Leadership Styles and Employee Psychological Capital 95
4.6 Employees' Psychological Capital and Organizational Resilience 96
4.7 Moderating Role of the Fear of COVID-19 on the Relationship Between Leadership Style and Employees' Psychological Capital 98
4.7.1 Transformational Leadership and Employees' Psychological Capital Moderated by Fear of COVID-19 98
4.7.2 Directive Leadership and Employees' Psychological Capital Moderated by Fear of COVID-19 100

4.7.3 Abusive Supervision and Employees' Psychological Capital Moderated by Fear of COVID-19 102

4.8 Mediating Role of Employees' Psychological Capital on the Relationship Between Leadership Styles and Organizational Resilience 105

4.8.1 Mediating Role of Employees' Psychological Capital on the Relationship Between Transformational Leadership and Organizational Resilience 105

4.8.2 Mediating Role of Employee Psychological Capital on the Relationship Between Directive Leadership and Organizational Resilience 107

4.8.3 Mediating Role of Employee Psychological Capital on the Relationship Between Abusive Supervision and Organizational Resilience 108

4.9 Leadership Styles and Organizational Resilience Mediated by Employees' Psychological Capital, Which is Moderated by the Fear of COVID-19 109

Chapter Five 112

Discussion 112

5.1 Introduction 112

5.2 Leadership Styles and Organizational Resilience 112

5.2.1 Transformational Leadership and Organizational Resilience 112

5.2.2 Directive Leadership and Organizational Resilience 114

5.2.3 Abusive Supervision and Organizational Resilience 115

5.3 Leadership Styles and Employee Psychological Capital 116

5.3.1 Transformational Leadership and Employees' Psychological Capital 116

5.3.2 Directive Leadership and Psychological Capital 117

5.3.2 Abusive Supervision and Psychological Capital 117

5.4 Employee Psychological Capital and Organizational Resilience 118

5.5 Moderating Role of the Fear of COVID-19 on the Relationship Between Leadership Styles and Employees' Psychological Capital 118

5.5.1 Moderating Role of Fear of COVID-19 on the Relationship Between Transformational Leadership and Employees' Psychological Capital 119

5.5.2 Moderating Role of Fear of COVID-19 on the Relationship Between Directive Leadership and Employee Psychological Capital 119

5.5.3 Moderating Role of Fear of COVID-19 on the Relationship Between Abusive Supervision and Employee Psychological Capital 120

5.6 Mediating Role of Employees' Psychological Capital on the Relationship Between Leadership Styles and Organizational Resilience 120

5.6.1 Mediating Role of Employees' Psychological Capital on the Relationship Between Transformational Leadership and Organizational Resilience 120

5.6.2 Mediating Role of Employees' Psychological Capital on the Relationship Between Directive Leadership and Organizational Resilience 121

5.6.3 Mediating Role of Employees' Psychological Capital on the Relationship Between Abusive Supervision and Organizational Resilience..... 122

5.7 Leadership Styles and Organizational Resilience Mediated by Employees' Psychological Capital, Which is Moderated by the Fear of COVID-19 122

Chapter Six 123

Conclusions and Recommendations 123

6.1 Introduction 123

6.2 Conclusions 123

6.2.1 Leadership Styles and Organizational Resilience 124

6.2.2 Leadership Styles and Psychological Capital 124

6.2.3 Moderating Role of the Fear of COVID-19 on the Relationship Between Leadership Styles and Employees' Psychological Capital 125

6.2.4 Mediating Role of Employees' Psychological Capital on the Relationship Between Leadership Styles and Organizational Resilience 125

6.2.5 Leadership Styles and Organizational Resilience Mediated by Employees' Psychological Capital Which is Moderated by Fear of COVID-19 126
6.3 Recommendations 126
6.3.1 Recommendations for Practitioners in SMEs and Academics 126
6.3.2 Recommendations for Policy 127
6.4 Limitations and Areas for Further Research 127
References 130
Appendices 149
Appendix I: Introductory Letter 149
Appendix II: Questionnaire for use by SME Employees 150
Appendix III: Distribution of Licensed SMES per County 161
Appendix IV: Authorization to use Copyrighted Measurement Tools 163
Appendix V: Timeline of Activities 164
Appendix VI: SU-IERC Ethical Approval 166
Appendix VII: National Commission for Science, Technology and Innovation Approval 167
Appendix VIII: Modes of Data Collection Means Comparison Tests 168
Appendix IX: Similarity Report 170

List of Figures

Figure 2.1: Conceptual Framework 48
Figure 4.1: Hypothesis 1 Path Diagram 93
Figure 4.2: Hypothesis 2 Path Diagram 95
Figure 4.3: Hypothesis 3 Path Diagram 97
Figure 4.4: Hypothesis 4a Path Diagram 98
Figure 4.5: Transformational Leadership Moderation Graph 100
Figure 4.6: Hypothesis 4b Path Diagram 100
Figure 4.7: Directive Leadership Moderation Graph 102
Figure 4.8: Hypothesis 4c Path Diagram 103
Figure 4.8: Abusive Supervision Moderation Graph 104
Figure 4.9: Hypothesis 5a Path Diagram 106
Figure 4.10: Hypothesis 5b Path Diagram 107
Figure 4.11: Hypothesis 5c Path Diagram 108
Figure 4.12: Hypothesis 6 Path Diagram 110

VT OMNES VNVM SINT

List of Tables

Table 2.1: Summary of Hypotheses 40
Table 2.2: Summary of Research Gaps 42
Table 2.3: Operationalization of study variables 49
Table 3.1: SME sampling design 56
Table 4.1: Sample Response Rate 66
Table 4.2: Firm demographic characteristics 67
Table 4.3: Respondent's Demographic Characteristics 70
Table 4.4: Overall Descriptive Statistics 72
Table 4.5a: Descriptive Statistics for transformational leadership 75
Table 4.5b: Descriptive Statistics for directive leadership 76
Table 4.5c: Descriptive Statistics for Abusive Supervision 77
Table 4.5d: Descriptive Statistics for Employees' psychological capital 79
Table 4.5e: Descriptive Statistics for fear of COVID-19 81
Table 4.5f: Descriptive Statistics for Organizational Resilience 82
Table 4.6: Correlations Table 84
Table 4.7: Intra-class Correlation 85
Table 4.8: Quality of the Measurement Model 86
Table 4.9: Fornel and Lacker Discriminant validity 88
Table 4.10: Outer Loadings and Indicator Multi-collinearity 89
Table 4.11: Hypothesis 1 Path Coefficients 94
Table 4.12: Hypothesis 2 Path Coefficients 96
Table 4.13: Hypothesis 3 Path Diagram 97
Table 4.14: Hypothesis 4a Path Coefficients 99
Table 4.15: Hypothesis 4b Path Coefficients 101
Table 4.16: Hypothesis 4C Path Coefficients 104
Table 4.17: Hypothesis 5a Path Coefficients 106
Table 4.18: Hypothesis 5b Path Coefficients 108
Table 4.19: Hypothesis 5c Path Coefficients 109
Table 4.20: Hypothesis 6 Path Diagram 111

List of Abbreviations

ABS- Abusive Supervision Scale

AVE-Average Variance Extracted

BRT- Benchmark Resilience Tool

COV-BPS- COVID-19 Business Pulse Survey

COVID-19- Coronavirus Disease of 2019

CR-Composite Reliability

CRLM-Crisis Response Leadership Matrix

FCV-19S- Fear of COVID Scale

HERO- Hope, Efficacy, Resilience, and Optimism

HTMT- Heterotrait Monotrait

IT-Information Technology

JD-R- Job Demand Resources

MSME- Micro, Small and Medium Sized Enterprises

MLQ- Multifactor Leadership Questionnaire

POB- Positive Organizational Behavior

PFIs -Participating Financial Institutions

PCQ- Psychological Capital Questionnaire

RBV-Resource-Based View

RMSEA-Root Mean Square Error of Approximation

RoR- Relative Overall Resilience

SARS- Severe Acute Respiratory Syndrome

SMEs- Small and Medium Sized Enterprises

SRMR-Standardized Root Mean Squared Residual

TTS- Transactional Theory of Stress

Acknowledgements

I would like to express my heartfelt gratitude to God for granting me the opportunity to pursue my studies. I extend my sincere thanks to my supervisors, Prof. Daniel Skarlicki and Dr. John Olukuru, for their invaluable support shown through numerous discussions that greatly contributed to this work. It has been a privilege to receive guidance from them.

I am very thankful to Strathmore University Business School for providing me with the great opportunity to undertake my doctoral studies. My appreciation goes out to my examining panels for their constructive feedback.

Furthermore, I wish to acknowledge my friends and colleagues who provided additional assistance in the form of mock defenses. Most importantly, I am deeply thankful to my family members for their prayers, resources, and steadfast motivation that enabled me to successfully complete my studies.

VT OMNES VNVM SINT

Chapter One
Introduction

1.1 Introduction

Organizations are increasingly confronted with crises and must safeguard their ongoing performance, and in some instances, their very survival. Particularly during a crisis, resilience refers to the ability to recover from disruptions by leveraging a variety of resources (Stoverink et al., 2020). These resources encompass psychological assets from individuals as well as collective resources arising from interdependent interactions between leaders and teams at the organizational level (Stoverink et al., 2020). Studies of resilience often propose particular ways of arranging or accumulating resources to create resilience (Stoverink et al., 2020; Teo et al., 2017).

Previous research notes that leaders are the originators and custodians of key resources that facilitate organizational resilience (Madi Odeh et al., 2021; Wibowo & Paramita, 2022). The foundation of organizational resilience could also lie in managing employee strengths particularly, their psychological capital, which sets an organization up for success even in adverse times (Envick, 2004). Despite being constrained by scarce resources, small and medium sized enterprises (SMEs) can capitalize on human resources that they possess (Simms et al., 2022) in terms of leaders and subordinates relationships (Teo et al., 2017). It has however not been fully explored to what extent human resources at various levels promote organizational resilience (Tasic et al., 2020) and how they need to be configured to achieve optimal outcomes hence this study.

The current study serves to deepen the understanding of organizational resilience capabilities by investigating how different leadership styles act as precursors and how employees' psychological capital serves as a resource that mediates the impact of these leadership styles on organizational resilience during a crisis. In this research, fear of COVID-19 is utilized as a psychological indicator reflecting the uncertainty generated by a macro-level crisis. Consequently, this study seeks to explore how leaders in small and medium-sized enterprises (SMEs) can foster organizational resilience by enhancing employees' psychological capital amid the COVID-19 crisis in Kenya. Previous studies

had demonstrated that psychological capital is susceptible to the influence of leadership (Ahmad et al., 2019; Wu & Nguyen, 2019) and that leadership also affects employees' coping strategies when confronted with negative emotions stemming from their environment, as employees tend to identify with and look up to their leaders (Hu et al., 2020). The results of this work could help organizations select and/or train leaders on appropriate leadership styles that positively influence employees' psychological capital and ultimately contribute to organizational resilience in a crisis.

1.2 Background to the Study

A crisis is an unforeseen and undesirable situation that a community recognizes as an urgent threat to their fundamental values or essential functions for survival, requiring action to be taken amidst uncertainty (Boin & Hart, 2007). The COVID-19 pandemic represents a strong macro crisis and was highly novel, critical and disruptive (McFarland et al., 2020). The pandemic was an acute extra organizational stressor that impacted personal, social and organizational resources in both destabilizing ways and as a catalyst for resilience (Kuntz, 2021). For businesses, an important question to ask in times of crisis such as the COVID-19, is why some entities were able to be resilient while others were not. The present study took a resource-based perspective to address this question. Vogus and Sutcliffe (2007) contend that resilience results from dynamics and processes that create or retain cognitive, emotional, relational or structural resources in a manner that is flexible, storable, convertible and malleable to enable organizations to both cope with and learn from the unexpected.

Coping approaches vary by a wide range of factors including organizational size, geographic location and sector (Sullivan-Taylor & Branicki, 2011). Small and medium sized enterprises (SMEs) are dominant in the enterprise landscape in both developed and developing countries and play a key role in economic development (Crick, Eskander, Fankhauser & Diop, 2018; Misati et al., 2017). For instance, Sullivan-Taylor and Branicki (2011), in a study of UK SMEs, noted that SMEs had a distinctive perspective and approach in dealing with extreme events as compared to large organizations. While most studies focus on SMEs in other continents, African SMEs are unique in terms of their challenges such as being hampered by poor governance, weak financial and physical infrastructure

(Misati et al., 2017), low managerial technical capacity and unskilled labour (Crick et al.,2018), all of which serve to hamper resilience.

1.2.1 Organizational Resilience

Resilience is a complex construct that spans multiple disciplines, dimensions, and levels (McManus et al., 2008; Stoverink et al., 2020; Kuntz, 2021). It is rooted in evolutionary theory, which encompasses variation, selection, and retention (McCarthy et al., 2017). In the field of ecology, Holling (1973) defined resilience as the capacity of a system to absorb disturbances and recover from them. When applied to business contexts, resilience refers to an organization's ability to endure crises (Annarelli & Nonino, 2016). However, management scholars emphasize that organizational resilience should be viewed as a process encompassing the entire organization rather than merely as an end result (Baardwijk & Reinmoeller, 2005; McManus et al., 2008).

Baardwijk and Reinmoeller (2005) identified four key dimensions of organizational resilience: adaptability, anticipatory ability, flexibility, and knowledge. Burnard and Bhamra (2011) conceptualize these dimensions along a timeline, emphasizing that organizations must be able to foresee risks and future trends (before), understand the situation, resist challenges, and act deliberately (during), as well as recover quickly, adapt, and innovate or reinvent themselves (after). This process should be aligned with both operational and corporate strategies to ensure survival in complex and turbulent environments (Burnard & Bhamra, 2011). In contrast, McManus, Seville and David (2008) define resilience based on how effectively a firm manages three critical dimensions: situational awareness, key vulnerabilities, and adaptive capacity within a complicated, interconnected, and dynamic environment. Overall, literature presents various dimensions of organizational resilience.

Researchers, however, agree that organizational resilience consists of a two-step process (Stoverink et al., 2020), from which we can get two critical dimensions of this concept (A. V. Lee et al., 2013). The first step occurs during the pre-crisis phase, where an organization encounters disruptions that surpass its preparedness for typical disturbances, necessitating a need for adaptation. The second step takes place in the post-crisis phase, focusing on the organization's recovery from the disruption and underscoring the significance of planning.

Collectively, adaptation is primarily aimed at reinstating previous order, while planning integrates resilience through learning, allowing an organization to enhance its capabilities and emerge stronger than it was prior to the crisis (Stoverink et al., 2020). Literature therefore emphasizes a two-step process of organizational resilience consisting of pre-crisis adaptation and post-crisis recovery planning. Linnenluecke (2017) describes this type of organizational resilience as a learnable capability that can be learned and developed in employees through managerial efforts, which subsequently affects their likelihood of success.

Organizational resilience is therefore operationalized in the present study using adaptability and planning capacity dimensions, effectively represented by the Benchmark Resilience Tool (BRT)) (Whitman et al., 2013), which is an enhancement the Relative overall Resilience (RoR) model (Lee et al., 2013). The BRT is a validated instrument for assessing resilience as a process arising from adaptive and planning capabilities (Brown et al., 2017), which can be fostered among employees through managerial interventions (Linnenluecke, 2017), particularly via proposed leadership styles as discussed below.

1.2.2 Leadership Styles

In a workplace setting, leadership is defined as an individual's capacity to influence, inspire, and empower others to enhance the organization's effectiveness (House et al., 2004). A leadership style on the other hand describes how a leader motivates their followers, provides guidance, and carries out plans (Podsakoff et al., 1996). There are several distinct leadership styles including transformational, authentic, authoritative, servant, laissez-faire, transactional, autocratic, participative, LMX, humble, responsible, considerate, initiating (Anderson & Sun, 2017; Bass, 1985; Crick et al., 2018; Nanjundeswaraswamy & Swamy, 2014; Owens & Hekman, 2012). Additionally, there is the dark side of leadership known as abusive supervision which highlights the potential for harmful behavior by leaders (Dai et al., 2019). In practice, corporate heads often blend various leadership styles within an organization and authority is not used in isolation from contract, coercion, or office (Milofsky, 2018).

The most studied leadership style during disruption is transformational leadership (Duchek, 2020). Transformational leadership is recognized as a crucial, value-driven

approach that enhances resilience during crises (Harland et al., 2005). Transformational leadership is linked with increased levels of positive affect thereby leading to greater resilience among team members (Sommer et al., 2016). Two behaviors of transformational leadership namely, idealized influence and inspirational motivation are however the most common in crisis management literature (Van Wart & Kapucu, 2011). Other behaviors of transformational leadership such as individualized consideration and intellectual stimulation may not fit in a crisis since there can be limited time for individualized attention and long-term change of beliefs (Van Wart & Kapucu, 2011). This diverse applicability of transformational leadership behaviors and their prevalence in crisis literature highlights their relevance for investigation in the current research focused on a novel global crisis.

Past research also notes that a strong decisive leadership is important in managing catastrophic disasters (Van Wart & Kapucu, 2011). A style such as directive leadership is likely key for crisis management (Bhaduri, 2019). Stoker, Garratsen, and Soudis (2019) conducted an event study of the impact of the 2008 financial crisis on leadership behaviors in thirty-six countries and found that directive leadership was the most common style of leadership that emerged after the macro exogenous crisis. Directive leadership works by focusing on goal setting and role clarity (Chen et al., 2017). Directive leadership is exercised in such a way as the leader implements a take-charge approach, defines expectations, communicates clearly, and expects obedience from followers (Bowers et al., 2017). Bhaduri (2019) asserts that in crisis contexts, it is essential for leaders to assert control, which necessitates a competency-based approach to crisis management that includes traits such as decisiveness, taking charge and clear communication. In this regard, leaders must be aligned with the correct crisis environment based on their competencies to determine success or failure to manage a crisis (Bhaduri, 2019; Bowers et al., 2017). Particularly, during containment stage of a crisis, risk taking, decisiveness and effective communication are the core leadership competencies needed (Wooten & James, 2008). Bowers et al. (2017) however note that while directive leadership style can stifle initiative from employees in crises, it is effective when working with problem employees. Additionally, despite its strengths, directive leadership can also lead to failure in crisis management because of lack of a learning orientation within the firm (Bhaduri, 2019; Bowers et al., 2017).

Other than the aforementioned positive leadership styles, negative leader behavior referred to as abusive supervision can also be prevalent during high stress periods (Burton et al., 2012; Halverson et al., 2004). Abusive supervision encompasses a range of sustained actions by leaders such as being rude, using offensive names, withholding important information, threatening employees with the loss of job among others (Keashly, 1998). Avey et al. (2021) emphasize that the intensity of the implications of negative events such as abusive supervision on work behavior is far more intense than the effects of positive work events. Individuals subjected to abusive supervision cope by exerting effort toward more deviant behaviors while demonstrating decreased task and contextual performance (Frieder et al., 2015).

In summary, the present study focused on transformative, directive, and abusive styles which emerged from crisis management literature for various reasons, including their prevalence and effectiveness under different conditions (Bhaduri, 2019; Bowers et al., 2017; Van Wart & Kapucu, 2011). A gap lies in identifying effective leadership styles for SMEs to use in macro crises to enhance organizational resilience. The lens of resource-based view is employed to view transformational and directive leadership styles as beneficial intangible resources and abusive supervision as being non-resourceful to deal with crisis. In the present study, transformational leadership was measured on a scale based on Bass' (1999) dimensions of idealized influence, intellectual stimulation, inspirational motivation and individualized attention using the Multifactor Leadership Questionnaire (MLQ) by Avolio and Bass (2004). Directive leadership was measured utilizing the Directive Leadership Scale of Litwin and Stringer (1968) as in Euwema et al. (2007). Abusive supervision was measured utilizing Tepper (2000) Abusive Supervision Scale (ABS). This present study further argues that leadership styles coordinate with followers through employee psychological mechanisms and this is discussed below.

1.2.3 Employee Psychological Capital

Employee psychological capital can be influenced by leadership styles (Avey, 2014; Wu & Nguyen, 2019), although this connection has not been thoroughly examined (Le, 2020). Psychological capital encompasses intangible assets that promote positive work outcomes and consists of four key psychological resources: hope, efficacy, resilience, and optimism—collectively referred to as HERO (Luthans, Youssef, & Avolio, 2007). According to Luthans et al. (2007), hope is demonstrated by individuals who maintain consistent goals and plans for success; self-efficacy involves the capacity to undertake challenging tasks and commit effort to accomplish them; resilience refers to the ability to recover from setbacks; while optimism represents a constructive perspective on both favorable and unfavorable events in work and life. HERO factors have a synergistic effect whereby psychological capital is not a single dimension alone but a shared variance of the four dimensions (Avey, 2014; Luthans et al., 2006). Psychological capital is acknowledged as a source of competitive advantage of a firm which enriches human capital at individual and organizational levels (Luthans et al., 2007).

Demerouti and Bakker (2011) contend that in times of crisis, employees are more likely to thrive when high job demands arising from crisis are balanced by substantial resources, including personal ones such as psychological capital. An increase in employees' psychological capital can lead to enhanced well-being, which in turn can have a favorable effect on organizational outcomes (Ryan & Deci, 2001; Wu & Nguyen, 2019). Furthermore, an individual's psychological capital is not fixed; it varies according to their surroundings (Envick, 2004), highlighting the importance of evaluating employees' psychological capital in different leadership contexts. The lens of job-demand resources theory (JD-R) is used in the present study to propose that during times of crisis, positive leadership styles—such as transformational and directive leadership—enhance employees' psychological capital. Conversely, negative styles, like abusive supervision, have detrimental effects. Employees' psychological capital subsequently plays a crucial role in achieving organizational goals, including resilience. The current analysis of psychological capital is based on the HERO framework of resources. These resources were evaluated on a scale using the Psychological Capital Questionnaire (PCQ). Furthermore, this present

study further posits that employees' psychological capital effectiveness as a mechanism through which leadership styles affect organizational resilience is contingent upon the employees' level of fear regarding crises and this is discussed below.

1.2.4 Fear of COVID-19

One distinguishing feature of infectious diseases, in contrast to other health conditions, is the element of fear (Ahorsu et al., 2022). The fear associated with COVID-19 stems from concerns about the likelihood of contracting the virus (Trougakos et al., 2020). This fear is directly associated with the rate and mode of transmission of the virus —which occurs rapidly and often without visible symptoms—as well as its associated morbidity and mortality rates (Ahorsu et al., 2022). The severe impacts of COVID-19 have led to significant changes in work behaviors, personal well-being, and family experiences (Trougakos et al., 2020). There has also been a notable increase in psychological symptoms and disorders worldwide, including fear, anxiety, stress, worry, irritability, insomnia, depression, confusion, anger, frustration (Pfefferbaum & North, 2020; Wang et al., 2020; Yao et al., 2020). In Kenya, there is anecdotal evidence indicating that fear of COVID-19 is widespread among the population.

Bligh et al. (2004) contend that the myriads of emotions felt after a crisis—such as fear, confusion, sadness, anger, and shock—can affect an individual's self-concept. As a result, the individual may want to invest increased faith and identify more with leaders as a coping mechanism. However, during a pandemic like COVID-19, identifying with leaders as a coping strategy may not always be feasible due to the increased prevalence of remote work necessitated by social distancing and isolation measures (Chong et al., 2020). This research suggests that whether working on-site or remotely, leaders have the potential to influence the psychological capital of employees who are more fearful about COVID-19 compared to those with lower levels of fear. This assertion is grounded in the understanding that individuals most affected by a crisis often require significant psychological support from others to manage their coping processes (Bligh et al, 2004), which aligns with the transactional theory of stress. Yan et al. (2021) observed that people who have cultivated strong cognitive and emotional coping mechanisms on their own exhibit different stress responses when confronted with a crisis. Researchers have developed a Fear of COVID

Scale (FCV-19S) which has been employed across various disciplines to measure fear of COVID-19 (Bakioglu et al., 2020; Gritsenko et al., 2020; Reznik et al., 2020). The present research evaluated the fear of COVID-19 among SMEs and classified it as high or low fear based on the FCV-19S scale.

1.2.5 Small and Medium Sized Enterprises in Kenya

In Kenya, small enterprises are classified as businesses with between ten and forty-nine employees, while medium-sized enterprises are those with fifty to ninety-nine employees (Kenya National Bureau of Statistics, 2016). The licensing process for SMEs occurs at both national and county levels. At the national level, licensing is conducted by state agencies or the national government; however, it is not compulsory for all SMEs and depends on the nature of the economic activity and the relevant regulatory framework (Kenya National Bureau of Statistics, 2016). At the county level, licensing involves securing a mandatory single business permit for a fee outlined in the respective County Finance Act (Kenya National Bureau of Statistics, 2016). In Kenya, there is a mix of licensed and unlicensed SMEs, with the unlicensed ones being poorly understood and lacking adequate support (Crick et al., 2018). According to data from the Kenya National Bureau of Statistics (2016) data, Nairobi county has the highest proportion of SMEs in Kenya at 44.2% followed by Nakuru (8.9%), Kiambu (8.1%) and Kisumu (6.3%) respectively.

The findings from the COVID-19 Business Pulse Survey (COV-BPS), carried out by the World Bank between June and August 2020, revealed several key insights regarding the impact of the COVID-19 pandemic on Kenyan SMEs: a) Overall, about 93 percent of SMEs experienced a decline in sales compared to the same period of the previous year. b) Close to 65 percent of SMEs experienced a decline in demand, cash flow, and available finance. c) The pandemic was disproportionally affecting small and female-owned businesses. d) SMEs were responding to the crisis through the adoption of digital technologies. e) About 20 percent of firms had received public support to recover from the effects of the pandemic. The COV-BPS also proposed policy response strategies categorized into four main areas: improving access to finance, enhancing firm capabilities, facilitating access to new markets, and minimizing uncertainty (World Bank, 2021). This present study conducted in Kenya is motivated by two of the World Bank's COV-BPS

policy recommendations regarding firm capabilities and uncertainty reduction. It focuses on analyzing two aspects of organizational resilience—planning and adaptive capabilities—along with their underlying factors.

A distinctive feature of Kenyan SMEs that sets them apart is a family business culture, which blends individualistic and collectivistic values (Jackson et al., 2008). Additionally, Kenya's ethnic and linguistic diversity sets Kenyan SMEs apart since it necessitates a sensitive approach to leadership and people management (Nyambegera, 2002). Research by Stoker et al. (2019) indicates that cultural orientations within the workplace can influence leadership behaviors and their effectiveness in managing crises. Additionally, Acquaah et al. (2011) found that family firms tend to exhibit greater resilience during challenging times for various reasons, including the desire to maintain a legacy.

SMEs in developing regions such as Kenya however face challenges such as limited managerial expertise, insufficient resources, and inadequate employee development, all of which impact their ability to adapt and succeed (Crick et al., 2018; Hampel-Milagrosa, Loewe, & Reeg ,2015). Despite these obstacles, it is argued that the inherent strengths of SMEs—such as innovation, flexibility, and adaptability—contribute to their resilience (Pal et al., 2014; Vossen, 1998). In developing nations, SMEs are mostly comprised of service sector firms, which form a major vehicle for empowering these economies (Crick et al., 2018).

The study of organizational resilience within the African context—particularly as societies experience significant political, social, and economic transformations— has not received sufficient attention from researchers (Nkomo & Kriek, 2011). It is crucial to frame leadership within this context to comprehend not only the values that guide leaders' actions but also the effectiveness of their leadership styles and decisions (Nkomo & Kriek, 2011). Key themes that define leadership across Africa include paternalism, filial loyalty, respect for authority, a focus on harmony, a collective mindset, and a high power distance (Crick et al., 2018; Oppong, 2013). Previous literature noted that directive leadership tends to arise more prominently in nations characterized by high power distance and strong respect for authority (Stoker et al. 2019). The present study examined how Kenyan employees view their leaders concerning three distinct leadership styles and how these leadership styles

relate to their psychological capital and organizational resilience during a time of significant disruption.

1.3 Problem Statement

Organizations have traditionally relied on benchmarking standards such as risk management and business continuity management standards to navigate crises, however these are insufficient in the face of severe crises (Aleksić et al., 2013). The present research is set against the backdrop of the significant crisis caused by the novel COVID-19 pandemic. Organizational resilience during this context conveys the properties of being able to adapt to the overall requirements of a business during the crisis (Aleksić et al., 2013). In the context of SMEs, resilience depends on the overall market and the SME's own resources including the business strategy and human resources (Aleksić et al., 2013). Blatt (2009) noted that SMEs typically have limited slack resources, which makes crises particularly stressful for them. Despite these resource constrains, leveraging on interconnections among available resources can enhance their resilience capacity (Pal et al., 2014).

Existing research on organizational resilience has several limitations. First, the organizational resilience construct is multifaceted (Kuntz, 2021), multidimensional (Baardwijk & Reinmoeller, 2005; McManus et al., 2008) and multilevel (Kuntz, 2021) which makes its analysis to vary. Within the field of business and management, two primary perspectives on the concept of organizational resilience have emerged. The first perspective conceptualizes and measures resilience as a binary concept where firms are assessed ex-post on whether they survived a crisis or not (Boin & Van Eeten, 2013). The second perspective treats resilience as a process that leads to resilient outcomes hence bringing out underlying issues that determine survival (Blatt, 2009; Duchek et al., 2020). The process-based understanding of resilience means that resilience is a learnable capacity that can be measured and developed (Linnenluecke, 2017). This second perspective is further composed of diverse process attributes for resilience as aforementioned in the background (Baardwijk & Reinmoeller, 2005; Duchek et al., 2020). Despite the diverse perspectives, Teo et al. (2017) recommend the process-based approach of organizational resilience since it allows for more inclusion of contextual factors and a more complex interaction of the interplay of risk and protective factors across individual, social and

organizational levels. This study hence adopts a process-based understanding of organizational resilience based on Whitman et al. (2013) dimensions of planning and adaptive capacity.

Second, diverse findings exist among scholars regarding empirically proven antecedents of organizational resilience. Organizational resilience and its antecedents are also under-examined in the SME context (Ozanne et al., 2022). Vakilzadeh and Haase (2020) postulate that resilience is highly context specific and diverse resources, capabilities and organizational structures promote resilience. Based on a leadership-resilience case study of a hospital in Singapore during the context of Severe Acute Respiratory Syndrome (SARS) crisis, Teo et al. (2017) underscore the crucial role of leadership in properly managing a severe crisis. Besides implementing an operational response to an organizational crisis, leaders usually bear social influence from relational networks and symbolic influence for direction and guidance to employees during a crisis (Teo et al., 2017). In the present research, the focus is on how leaders activate organizational resilience through various leadership styles.

Third, tests for mediation and moderation are needed to understand the mechanisms through which resilience is attained and the factors that are contingent (Linnenluecke, 2017; Stoverink et al., 2020; Teo et al., 2017). Scholars contend that resilience can be shaped by leaders as a learnable skill within employees (Linnenluecke, 2017; Luthans et al., 2014). Through interaction with leaders, employees can reframe their mental state to become hopeful, efficacious, resilient and optimistic (Dimino et al., 2020). Furthermore, these interactions lead to varied perceptions of being valued, which can mitigate the adverse effects of crises (Hu et al., 2020). Consequently, this present study posits that psychological capital serves as the mechanism through which leadership styles influence organizational resilience. Additionally, the level of the extent of fear associated with the crisis (COVID-19) is identified as a significant emotion that influences the psychological exchange of resources between leaders and their subordinates.

Forth, a methodological design gap lies in literature whereby organizational resilience has been predominantly linked to macro level phenomena (Molina-Azorín, 2014). This indicates a need for multi-level studies that connect micro level phenomena to macro-outcomes. The rationale behind this is that collectives are fundamentally composed of

heterogenous individuals who make decisions and are the acting entities (Molina-Azorín, 2014). Vakilzadeh and Haase (2020) echo this perspective and call for more multilevel studies in research designs to understand how resilience can be scaled up based on the interdependent nature of organizational resilience across individual, team, and organizational levels. Such research could also provide valuable insights for practitioners by offering evidence regarding the role of employees in contributing to resilience across different levels of analysis (Vakilzadeh & Haase, 2020). Consequently, the present study thus took up the call by researchers to study the interplay of micro level constructs in contributing to organizational resilience.

Fifth, theoretically, the present study aims to examine and expand upon the following three theories that are applied to explain the proposed relationships between variables: (a) the resource-based view, (b) job demands resources theory, and (c) transactional theory of stress. Grounded in resource-based theory, the present research seeks to deepen the understanding of why transformational, directive, and abusive supervision influence organizational resilience. This research posits that transformational and directive leadership are intangible resources that SMEs can leverage to bolster resilience. On one side, transformational leadership is trust-based and contributes to effective problem solving (Homan & Greer, 2013), while other the other side, directive leadership is competency-based and may be important to make progress towards resilience (Uitdewilligen & Waller, 2011). Abusive supervision is included because it is conceptually different from transformational and directive leadership hence it is important for comparison of opposites (Wu & Nguyen, 2019). Additionally, abusive supervision is relevant because it especially emerges when the organization experiences high stress (Burton, Hoobler, & Scheuer, 2012). Further, based on job-demands resources theory (JD-R), the present study builds on the scant body of research that examines whether employees make a difference in the success of a business during periods of high job demands (Bakker & Schaufeli, 2008) hence the need to build their psychological capital. The present research proposes that leaders transact with followers psychologically, influencing their coping mechanisms, particularly during times of high stress. Through the application of the transactional theory of stress and coping, the present study proposes that leaders' interaction with subordinate employees

can have a greater impact on those who are more fearful of the crisis (COVID-19) than those who are less fearful.

Sixth, the present study utilizes the COVID-19 pandemic as a major event where resilience can be assessed. Events such as financial crises and pandemics are often prerequisites for studying organizational resilience as there must be some sort of bouncing back from a shock/crisis. Wooten and James (2008) postulated that crises are catalysts for organizations to think differently for what is possible. McFarland et al. (2020) indicate that the onset of COVID-19 pandemic created a critical event that was novel and highly disruptive at a global omnibus level. Morgeson et al. (2015) argue that the more critical the event, the more likely it will be salient and require unusual attention. The COVID-19 pandemic brought a situation where threat is uncontrollable and people are apprehensive about having or contracting the virus (Trougakos et al., 2020). Generally, the study of how SMEs respond to extreme events and create resilience is under-examined (Sullivan-Taylor & Branicki, 2011). Thus, this present study thus aims to advance scholarly understanding of the impact of the COVID-19 crisis on SMEs.

Finally, As regards the context, African SMEs face numerous obstacles, including financial difficulties, inadequate governance, trade barriers, and a lack of workforce motivation (Crick et al., 2018; Ellis & Keys, 2014) all of which serve to hurt resilience. A majority of SMEs in Africa are based in the service sector since relatively less capital is needed to start a service-based business than in the industrial sector (Crick et al., 2018). Particularly within Africa, Kenya is of interest because of the unique attributes of SMEs such as family business orientation (Jackson et al., 2008), value for both individualistic and group welfare (Jackson et al., 2008) and ethnic diversity (Nyambegera, 2002) all which could affect the perception of leadership and subsequent organizational resilience. This study therefore focused on Kenya to bring out how SMEs can achieve organizational resilience from a leadership and employees' psychological capital perspective.

1.4 Research Objectives

The present research aimed to investigate the relationships among leadership style, fear of COVID-19, psychological capital and organizational resilience of SMEs in Kenya. Specific objectives for this research were:

1. To assess the relationship between leadership styles and organizational resilience of SMEs in Kenya.
2. To establish the relationship between leadership styles and employees' psychological capital of SMEs in Kenya.
3. To determine the relationship between employees' psychological capital and organizational resilience of SMEs in Kenya.
4. To investigate the moderating role of fear of COVID-19 on the relationship between leadership styles and employees' psychological capital among SMEs in Kenya.
5. To investigate the mediating role of employees' psychological capital on the relationship between leadership styles and organizational resilience among SMEs in Kenya.
6. To examine whether the relationship between leadership styles and organizational resilience is mediated by employees' psychological capital which is moderated by fear of COVID-19 among SMEs in Kenya.

1.5 Research Questions

1. What is the relationship between leadership styles and organizational resilience among SMEs in Kenya?
2. What is the relationship between leadership styles and employees' psychological capital among SMEs in Kenya?
3. What is the relationship between employees' psychological capital and organizational resilience among SMEs in Kenya?
4. Does fear of COVID-19 moderate the relationship between leadership styles and employees' psychological capital among SMEs in Kenya?
5. Does employees' psychological capital mediate the relationship between leadership style and organizational resilience of SMEs in Kenya?
6. Are leadership styles and organizational resilience mediated by employees' psychological capital, which is moderated by fear of COVID-19 among SMEs in Kenya?

1.6 Scope of the Study

This present study focused on licensed small and medium-sized enterprises (SMEs) in Kenya. According to the most recent Micro, Small and Medium Enterprises report, there are 121,719 licensed SMEs in the country (Kenya National Bureau of Statistics, 2016). However, there is currently no comprehensive register detailing the total number of employees working within these SMEs in Kenya.

1.7 Significance of the Study

The current study is significant for academic purposes as it provides both empirical and theoretical insights into how leadership styles, the fear of COVID-19, and employees' psychological capital affect the organizational resilience of SMEs in Kenya. A conceptual model that incorporates these relationships was developed to predict organizational resilience. The COVID-19 pandemic was chosen as a critical context for evaluating organizational resilience. The multi-level approach employed in this study highlights how a macro-level shock like COVID-19 influences leadership behavior at a micro level and subsequently affects organizational outcomes, particularly organizational resilience.

The present study holds significant relevance for public policy, which is crucial in fostering the resilience of enterprises. Specifically, access to information and specific adaptation assistance could increase probability for the sustainable adaptation of SMEs (Crick et al., 2018). Additionally, limitations to a one-size-fits-all solution for organizational resilience exist hence the need to contextualize the resilience of SMEs. Sullivan-Taylor and Branicki (2011) demonstrated that SMEs exhibit distinct characteristics from large firms. The current study emphasizes the importance of public policy in enhancing organizational resilience by advocating for tailored support mechanisms for SMEs.

Lastly, the present study is particularly beneficial for practitioners, especially leaders of SMEs, as it emphasizes the importance of leadership style during crises such as COVID-19. Effective leadership is crucial in times of crisis because leaders are responsible not only for setting strategic directions but also for implementing practices and policies that leverage employee skills and competencies (Crick et al., 2018). This research measured various leadership styles and examined which styles were most effective in enhancing employees' psychological capital across different fear profiles, ultimately contributing to

organizational resilience. The findings suggest that since leadership can be developed through training, SMEs have the opportunity to select or train leaders who adopt suitable leadership styles during crises, thereby improving their overall resilience.

Chapter Two

Literature Review

2.1 Introduction

This section provides the theoretical underpinnings of the study, empirical review of the specific objectives, summary of the research gaps, and last, the conceptual framework.

2.2 Theoretical Framework

The current study is grounded on three theories: the resource-based view (RBV), the job-demands resources (JD-R) theory, and the transactional theory of stress. The RBV is utilized to highlight leadership style as an intangible resource that plays a crucial role in managing employees alongside other resources within the organization. This management aims to enhance employees' psychological capital and bolster organizational resilience. The JD-R theory is applied to investigate how psychological capital influences employee well-being. It posits that employees are more likely to thrive when their job demands, particularly during crises, are balanced with increased resources—specifically psychological capital—which in turn fosters greater organizational resilience. Additionally, the transactional theory of stress provides a framework for understanding fear from a reciprocal perspective involving both individuals and their environment—in this case, the context of COVID-19. Employees facing stress may experience fear; however, this response can be alleviated through supportive leadership. These theories are elaborated upon in the following sections.

2.2.1 The Resource-Based View

The resource-based view (RBV) posits that the competitive advantage that a firm holds stems from the tangible and intangible resources that it possesses or controls (Barney, 1986; Wernerfelt, 1984). Barney (1991) defined resources as including all assets, capabilities, firm attributes, information, knowledge and organizational processes that are controlled by a firm and facilitate the conception and implementation of strategies that improve efficiency and effectiveness. RBV assumptions include that each organization is a collection of unique resources and capabilities that form the basis for good performance and that the resources are not highly mobile across firms (Barney, 1991). RBV therefore focuses on how firms utilize valuable, rare, costly to imitate and non-substitutable

(VRIN/O) resources plus have the organization (O) in place to absorb and apply them to create sustainable competitive advantage (Barney, 2001). Notably, these assumptions are the same for various related concepts including core competencies, dynamic capabilities and the knowledge based view (Kraaijenbrink et al., 2010). Unlike the industrial organization (IO) model, RBV puts the determinants of a firm performance within the firm (Kraaijenbrink et al., 2010).

Despite its helpful propositions on the determinants of a firm performance, RBV theory has been criticized based on the viability of its assumptions and neglect of external environment forces (Barney, 2001; Kraaijenbrink et al., 2010). RBV's message has been criticized for three main reasons (Kraaijenbrink et al., 2010): First, the VRIN/O framework proposed by RBV is neither necessary nor sufficient for achieving sustainable competitive advantage, as there are ongoing debates about the nature and roles of resources, markets, and individuals in generating sustainable competitive advantage; second, the theory is considered tautological because its definitions of value and uniqueness lack law-like generalizations and remain indeterminate; third, the definition of a resource within RBV is seen as axiomatic and overly broad, encompassing anything that could be strategically beneficial, which renders it unworkable (Kraaijenbrink et al., 2010).

The application of RBV possess a challenge of whether RBV applies for small firms. Kraaijenbrink et al. (2010) argue that while some scholars (Connor, 2002) suggest that RBV is not applicable for small firms because of resource scarcity, the theory still applies especially in light of intangible resources that may give small firms unique competitive advantage. Despite these criticisms RBV has only diminished its opportunities for more progress to explain sustainable competitive advantage but RBV is among the most influential theory in management theorizing (Kraaijenbrink et al., 2010).

RBV has received the most attention in the study of micro-foundations that explain influence of individual actions and interactions on firm heterogeneity (Molina-Azorín, 2014). The field of management has endeavored to link phenomena at the macro level to macro level outcomes, however there is a dearth of multi-level studies that link micro level phenomena to macro outcomes based on the argument that collectives are inherently made up of heterogenous individuals (Molina-Azorín, 2014). The main argument of micro-

foundations is that individuals within a group matter, and this micro level is key in the explanation of collective strategic issues (Molina-Azorín, 2014). Barney et al. (2011) noted that studying micro-foundations within the firm is the future of resource-based view of the firm. Bakker and Schaufeli (2008) underscore that human resources make a critical difference when it comes to innovation, organizational performance, competitiveness, and thus ultimately business success.

On its past application, several studies on organizational resilience in small firms view leadership as an important intangible resource that can influence knowledge creation and innovation to enable a firm be resilient (Lengnick-Hall et al., 2011; Pal et al., 2014). Understanding the connections among human resources (HR) systems, organizational resilience and strategic capabilities contributes to growing literature on intangible assets (Lengnick-Hall et al., 2011). While most firms operate under scarce resources, these can be leveraged through understanding connections among the resources for competitive performance (Lengnick-Hall et al., 2011). Blatt, (2009) indicates that resilience hinges on entrepreneurial teams' ability to become creative in managing scarce resources to overcome challenges.

RBV applies in this present study to highlight leadership style as an intangible resource that manages other resources in the firm and more importantly, human resources to create competencies among employees to contribute to organizational resilience. Vogus and Sutcliffe (2007) underscore that resilience emanates from dynamics and processes that create or retain resources including relational, cognitive, emotional or structural resources in a form that is convertible and malleable that enables organizations to cope with surprises. The present research therefore assumes that human resources (leaders and subordinate employees) are key resources that explain differentials in SME resilience.

2.2.2 Job-Demands Resources Theory (JD-R)

The JD-R theory by Demerouti, Bakker, Nachreiner, Schaufeli and Wilmar (2001) predicts the dual function of demands and resources by integrating the study of stress and motivation at work. This theory is based on the assumption that despite every occupation having its own risks associated with job stress, these factors can be classified as either job demands or job resources (Bakker & Demerouti, 2007). Job demands are the initiators of

exhaustion while job resources initiate motivation. Job demands include psychological, social, physical or organizational components of a job that require constant psychological and/or physical effort and are at certain psychological and/or physiological costs. Meijman and Mulder (1998) noted that job demands are not essentially negative but when they require high effort and the employee is unable to recover adequately, they become job stressors. Demerouti and Bakker (2011) contend that job resources refer to components of a job that reduce job demands and the associated costs, promote personal growth and development, and help in achieving work goals. Job resources occur at the organizational level (salary, job security), interpersonal level (supervisor- support, teamwork), job position level (role clarity) and task level (task identity, task significance) (Demerouti & Bakker, 2011).

Research notes that personal resources such as self-efficacy, optimism, and organizational-based self-esteem also play a role in the JD-R theory (Xanthopoulou et al., 2007). Personal resources refer to an individual's sense of their ability to manage and impact their environment successfully and are linked to resiliency (Hobfoll et al., 2003). Xanthopoulou et al. (2007), found that personal resources including self-efficacy, optimism and organizational-based self-esteem help employees to deal more effectively with demanding conditions (Xanthopoulou et al., 2007). In addition, Llorens et al. (2006) found that JD-R may be applied to a wide variety of occupational settings, countries, methods of data collection and irrespective of the particular demands and resources involved and hence the theory is robust.

Researchers have examined how psychological capital develops and found that its component factors are synergetic and state-like as opposed to trait-like, meaning they are open to development (Luthans et al., 2006). Xanthopoulou et al. (2007) note that personal resources (such as employees' psychological capital) can act as moderators or mediators in the relationship between environmental factors and organizational outcomes since they affect the way people perceive and react to their environment. Demerouti and Bakker (2011) noted that constructs in the JD-R theory can be integrated across multiple levels including individual, group and organizational level. Additionally, Bakker and Schaufeli (2008) noted that employees make a difference in the success of a business hence the need

to provide them with more input such as developing their psychological capital in order to achieve more engagement and output from them. This research thus applies JD-R theory to examine employees' psychological capital as the mechanism through which leadership styles relate to organizational resilience.

2.2.3 Transactional Theory of Stress and Coping

The transactional theory of stress and coping (TTS) by Lazarus and Folkman (1987) postulates that emotions (including fear) can be effectively understood from the conjoined perspective of the person and the environment, whereby the independent identities of the person and the environment are lost in favor of a new condition or state. Transaction is the language of relationships whereby two basic subsystems of the person and the environment interplay and operate at a new level of analysis (Lazarus & Folkman, 1987).

Stress results from negative person-environment relationships and includes emotional response states such as fear, guilt, anger and shame (Lazarus & Folkman, 1987). Individuals who experience stress adopt relevant coping mechanisms based on attribution of what they know or think and appraisal about what it means for them (Lazarus & Folkman, 1987). There are two coping models namely, the animal model and the ego psychology model (Lazarus & Folkman, 1987). The animal model is whereby coping happens simply as a behavioral response of escaping or avoiding (Lazarus & Folkman, 1987). The ego psychology model on the other hand emphasizes on the thinking involved in making adaptation decisions and the actions employed to manage impulses to regulate emotional distress (Lazarus & Folkman, 1987). The ego psychology model is process based and is facilitated by processes such as appraisal which can be classified further into two: Primary appraisal that looks at what is at stake in the appraisal process and secondary appraisal that looks at coping options including coping that is backed with the use of social support (Lazarus & Folkman, 1987).

Since TTS theory was developed, research has introduced multiple variables to the stress-transaction model hence expanding and categorizing various factors to account for the complex systems involved in experiencing a stressor (Werner, 1993). Lazarus and Folkman (1991) noted that individual characteristics could mitigate the extent to which people are

affected by stressors in their immediate environment. These characteristics are linked to individuals' resources, that help an individual to attain their goals (Guo et al., 2018).

Bligh et al. (2004) found that the myriad of emotions felt after a crisis including fear, confusion, sorrow, anger and shock can affect an individual's self-concept and hence the individual may want to invest increased faith and identify more with leaders as a coping mechanism. Hu et al. (2020) also noted that feeling valued can buffer negative influences of anxiety associated with mortality salience. Perceptions of strong need during a crisis drives followers to socially construct and project qualities of a leader to guide them through the crisis and this qualities can be real or attributed (Bligh et al., 2004). Guo et al. (2018) found that authoritarian leaders not only influence the emotions of employees in the form of fear and defensive silence but also their resulting outcomes such as employee creativity.

On its recent application, Yan et al. (2021) applied the transactional theory of stress model to assess COVID-19 risk perception among hospitality workers in Peru and noted that the key insight of the transactional theory of stress model is that the same environmental stimulus elicits different reactions from people based on how they assess and cope with it. Personal judgements of how much risk COVID-19 poses depends on the belief on the severity of the virus to an individual's health (Yan et al., 2021). Issues such as religious faith and spirituality may affect the formulations of risk assessment of contracting and being affected by COVID-19 (Yan et al., 2021). Additionally, there are people who have developed strong cognitive and emotional coping mechanisms on their own and may not perceive a high-risk assessment hence experience a differing stress response (Yan et al., 2021). Based on evidence on variance in cognitive appraisal and differing stress responses of COVID-19 (Yan et al., 2021) the present research suggests that employees with different levels of fear of COVID-19 based on their cognitive appraisal of the virus could be influenced under different leadership styles to cope differently with the stressor either to increase or decrease their work efforts towards organizational resilience.

2.3 Empirical Review

The discussion below is sequenced in the order of the specific study objectives.

2.3.1 Leadership Styles and Organizational Resilience

The importance of leadership to the resilience of organizations facing both acute and everyday challenges is a recurrent theme in extant literature (Beermann, 2011; Felland et al., 2003; Sawalha, 2015). Lack of certain leadership qualities often leads to poor disaster response in emergency management literature suggesting that those in authority must exhibit certain styles of leadership to effectively manage during periods of disaster (Valero et al., 2015). Several studies have theorized a link between leadership style and resilience. Duchek et al. (2020) indicated that transformational leadership is a resilience-enhancing leadership style because it is correlated with high levels of positive affect hence contributing to greater resilience among teams. Seville et al. (2006) noted that inspiring yet realistic leadership (such as transformational leadership) is crucial in corporate turnaround after a shock. Van Wart and Kapucu (2011) note that transformational leadership facilitates successful organizational change of all types by emphasizing on the critical role of leaders and follower empowerment for inspirational and organizational-wide change management.

Conversely, some scholars assert that top-down leadership approaches such as transformational leadership style are not as effective in promoting job engagement during times of high anxiety as compared to bottom down approaches such as servant leadership style (Hu et al., 2020; Van Dierendonck, 2011). Transformational leadership might not work to manage and bounce back from a crisis since practically, there can be no time for individualized attention and long-term change of beliefs (Van Wart & Kapucu, 2011). Wooten and James (2008) argued that during the containment stage of a crisis, risk taking, decisiveness and effective communication are the core leadership competencies needed. For acute crisis management however, Van Wart and Kapucu (2011) found that strong decisive leadership is commonly used compared to iterative process-oriented leadership. It is therefore not clear on the most effective leadership style for resilience management in organizations and this could vary with the intensity of the crisis. This present study thus focuses on evaluating transformational, directive and abusive styles.

Transformational leadership is composed of four main behaviors namely, inspirational motivation, idealized influence, intellectual stimulation and individualized consideration (Bass, 1999). Inspirational motivation behavior focuses on developing and articulating a

shared vision and expectations that are motivating and challenging while idealized influence fosters behavior that depicts that leaders serve as role models by being consistent with the articulated vision (Bass, 1999). Intellectual stimulation is about soliciting followers' ideas and challenging existing assumptions while individualized attention points to tending to each follower uniquely thereby fostering trust (Bass, 1999).

Gang et al. (2011) contend that transformational leaders increase followers' confidence, and levels of motivation. Podsakoff et al. (1996) found that transformational leadership motivates followers to go beyond the minimum threshold set by their job descriptions hence influencing task performance. According to Gang Wang et al. (2011), transformational leadership influences followers to work for the good of the group thereby sacrificing their own interests for the collective group hence increasing contextual performance (extra role performance and organizational citizenship behavior). Transformational leadership style emphasizes leaders motivating their followers to go beyond self-interest and work for common good (Avolio & Yammarino, 2002; Bass, 1995). From these arguments, transformational leadership hence positively relates to individual task, contextual and creative follower performance.

Similarly, transformational leadership affects different organizational levels. At group level, transformational leaders communicate the group vision and motivate members towards achievement through enhanced levels of social identification and team cohesion (Gang et al., 2011). The group vision fulfills several key objectives for its followers: it empowers them to set achievable goals and fosters a belief in their ability to reach those goals (Gooty et al., 2009). Additionally, it facilitates successful task performance that aligns with the overarching vision, encourages positive outlooks regarding the future, and cultivates resilience in the face of challenges. This resilience stems from a belief in a favorable future, motivating individuals to exert effort and persevere through difficulties (Gooty et al., 2009). Gang Wang et al. (2011) argue that transformational leadership affects performance at organizational level through direct leadership of the top management team who influence the organizational climate, systems and strategies. Transformational leaders serve as role models for leaders at lower levels hence cascading down their influence throughout the entire organization (Waldman & Yammarino, 1999). Additionally,

transformational leaders are able to be flexible and improvise when plans fail to match the situation at hand through an environment of intellectual exchange with members of the organization (Valero et al., 2015).

Notwithstanding, creating organizational resilience is argued to be contextual and an organizational contingent concept (Sullivan-Taylor & Branicki, 2011). Based on the aforementioned views, the present research proposes that equipped with a compelling vision, mission and congruency in work efforts drawn from idealized influence, intellectual stimulation, individual consideration and inspirational motivation, an organization is more likely resilient through disasters. This application of transformational leadership may be contextual, both culturally and geographically. Hence, this study hypothesizes that:

H1 (a): *Transformational leadership is positively associated with organizational resilience.*

Directive leadership was the "go to" leadership style for most leaders during a major crisis (Stoker et al., 2019). In their study of 980 organizations across 36 countries, Stoker et al. (2019) discovered that following the 2008 financial crisis, there was a significant increase in the adoption of directive leadership styles among leaders. This trend was particularly pronounced in countries characterized by high power distance and a strong preference for authority, as well as within the manufacturing sector. The authors posited that the presence of threats influences managerial responses, resulting in reduced information processing and a restriction of control at various organizational levels, which are hallmarks of directive leadership (Stoker et al., 2019). Directive behavior functions whereby leaders give clear and detailed instructions, structures tasks and expects follower obedience to instructions (Stoker et al., 2019).

Similarly, Bhaduri (2019) in their conceptual analysis of leadership in crisis came up with a proposition that during times of crisis, leaders have direct effect on organizational outcomes. Leaders must take the responsibility for orchestrating a work environment that infuses decisiveness, effective communication and risk taking for a competency based approach to crisis management (Bhaduri, 2019). This is view is shared by previous researchers, Wooten and James (2008) who advocated for a competency based approach to crisis management based on incisiveness and taking direct responsibility.

Directive leadership might however not be effective despite its widespread application by leaders for crisis response. Bowers et al. (2017) demonstrated this through a conceptual model that they proposed known as the Crisis Response Leadership Matrix (CRLM) that connects four leadership styles namely directive, transformational, transactional and cognitive styles with their crisis response in order to identify the type of leader equipped to lead through a major crisis given the organizational culture used. Directive leadership was viewed in the CRLM matrix to be important only pre-crisis, for internal crises and for hierarchical organization structures (Bowers et al., 2017). Other scholars also hold similar arguments against directive leadership for crisis management. Wooten and James (2008) postulated that a learning orientation is key in creating organizational resilience since organizations can learn from experience to develop new routines and behaviors for resilience. There is therefore a lack of agreement on the outcomes of directive leadership. However, this research is of the view that for extreme events, directiveness is key to organizational resilience. Hence, this study hypothesizes that:

H1 (b): *Directive leadership is positively associated with organizational resilience.*

Abusive supervision is a manifestation of dysfunctional workplace behavior where a boss is seen to undermine and ridicule those working below them (Tepper, 2000). Tepper (2000) defined abusive supervision as the perception of subordinates regarding the extent to which supervisors engage in consistent verbal and non-verbal hostile behavior excluding of physical contact. Abusive supervision is usually consistent for long periods because of the following two reasons, a). Targets feel powerless to take corrective action because they depend on the abuser economically or they fear the unknown should they take corrective action, b). The abuser sometimes mixes abusive behavior with normal behavior hence targets suppose that the abuse will end and abusers often fail to recognize and take responsibility of their abusive behavior (Tepper, 2000). Notably, subordinates may not always be objective of supervisor's behavior however they respond in ways reflective of their perceptions (Frieder et al., 2015; Martinko, Harvey, Brees & Mackey, 2013).

Consequences of abusive supervision include increased job turnover and for those who remain working, lower job satisfaction, psychological distress, conflict between work and family and lower life satisfaction among others (Tepper, 2000). Tepper, Duffy, and Shaw

(2001) found that when subordinates perceive supervisor abuse they respond by deviant behaviors. Deviant behaviors resulting from abusive supervision such as reduced task performance (Hoobler & Hu, 2013) and reduced contextual performance (Rafferty & Restubog, 2011) have been reported in literature. Abusive supervision fosters psychological distress, poor attitude towards work and intention to quit (Rafferty & Restubog, 2011). Individual differences for instance in personality among subordinates however affect the extent of the response to abusive supervision (Frieder et al., 2015). As such Nandkeolyar et al. (2014) found that conscientiousness reduced the effects of abusive supervision on job performance. However, despite the extent, abusive supervision could detract from task and contextual performance hence this study hypothesizes that:

H1(c): *Abusive supervision is negatively associated with organizational resilience.*

2.3.2 Leadership Styles and Employees' Psychological Capital

Leadership is demonstrated by the ability of individuals to motivate, influence and enable others to contribute towards the betterment of the organizations to which they are members (Guillaume et al., 2015). Leaders hold key resources including psychological ones that facilitate employee achievement in the job (Avey et al., 2021). Psychological capital is a resource variable that is amenable to situation influences such as leadership (Ahmad et al., 2019). Psychological capital is composed of the positive psychological states (as opposed to traits) of development composed of self-efficacy, hope, optimism and resilience which work together synergistically to improve the well-being and performance of individuals (Luthans et al., 2007; Wu & Nguyen, 2019).

Scholars have found that employees' psychological capital fluctuates based on leadership styles used (Avey, 2014; Wu & Nguyen, 2019). For instance, draining work environment caused by abusive supervision was found to result in not only loss of personal resources but also lead to a cycle of loss, destructive attitudes and behaviors (Avey et al., 2021). Similarly, enabling work environment facilitated by positively oriented leadership styles such as transformational leadership result in enhancing employees' psychological capital (Gooty et al., 2009). Generally, with higher employees' psychological capital, higher levels of well-being are achieved (Ryan & Deci, 2001; Wu & Nguyen, 2019).

Transformational leadership style increases follower confidence and leads to higher levels of motivation (Van Wart & Kapucu, 2011). Additionally, transformational leadership encompasses the leader's ability to motivate followers to go beyond themselves and achieve a higher sense of purpose (Gooty et al., 2009). Gooty et al. (2009) proposed that transformational leadership is linked to psychological capital of followers through the following four attributes, a powerful vision from a transformational leader enables the followers to; a). Set goals and believe in them, b). Be hopeful of the future, c). Create belief in their capacity to effectively perform tasks in line with the vision and d). Generate resilience because a favorable future is foreseeable. These attributes link with attributes of psychological capital namely, optimism, hope, self-efficacy and resilience (Gooty et al., 2009). Gooty et al. (2009) found that transformational leadership enhanced psychological capital. Similarly, McMurray et al. (2010) found that transformational leadership significantly influenced employees' psychological capital by enabling employees' social identification with the organization, increasing employees' self-efficacy and linking the organization's and followers' values. Despite these benefits, Tourish (2013) noted that transformational leaders could also be narcissistic and megalomaniac, which might not influence followers positively. From the aforementioned majorly positive empirical evidence, this present study views transformational leadership as enhancing employees' psychological capital and hypothesizes that:

H2 (a): Transformational leadership is positively associated with employees' psychological capital.

Directive leadership is composed of leaders giving clear and detailed instructions, structuring tasks and expecting follower obedience to instructions (Stoker et al., 2019). Directive leadership has been viewed in most occasions as ineffective and the cause of defective processes and poor outcomes however there is evidence that directive leadership works for some cultures such as those with high power distance, paternalistic cultures and cultures of the East such as Chinese Confucian culture (Chen et al., 2017; Peterson, 1997). Leader directiveness does not always have to mean pressure for unanimity to the point of interference to cognitive processing and individual moral judgement (Peterson, 1997). Also, leader directiveness is not a unitary construct but is composed of open directive and

closed directive dimensions (Peterson, 1997). Open directive dimension means that leaders do not assert a position of their own but encourage discussion of ideas from followers while closed directive entails the opposite (Peterson, 1997). Open directive leaders hence lead to high quality decisions, improved participation, inclusion of all group members, and hence enhancing employees' well-being.

In the context of China, Chen et al. (2017), in their study juxtaposed the hierarchical control of a directive leader with training and achieving focus to come up with directive achieving leadership. In directive-achieving leadership, the leader is more like a father, a coach, a teacher who conveys to followers the methods by which they have achieved success (Chen et al., 2017). Directive-achieving leadership has training and instruction dimensions through which followers are guided, inspired and facilitated to set and achieve challenging goals (Chen et al., 2017). This achievement-oriented leadership expects continuous improvement, excellence and shows confidence in follower's abilities hence it is beyond centralizing power and exerting control. This present research views directive leadership as both enabling by inspiring employees and building confidence in their abilities to achieve goals from the example of a competent leader and directive in terms of insisting on the achievement of goals and therefore hypothesizes that:

H2 (b): Directive leadership is positively associated with employees' psychological capital.

Perceptions of abusive supervision have been found to lead to emotional exhaustion, dissatisfaction and psychological distress (Frieder et al., 2015). Avey et al. (2021) found that abusive supervisors reduce the employees' psychological capital and recommended that firms should use psychological capital interventions to buffer deleterious impact of abusive supervisors. Similarly, Tepper et al. (2001) found that abusive supervision is a source of chronic stress and victims suffer from psychological distress.

Psychological capital as a resource is not stable but it is affected by situational influences that increase or decrease it (Ahmad et al., 2019). Agarwal (2019) found that abusive supervision negatively affected employees' psychological capital through the application of conservation of resources theory that views abusive supervision as resource draining.

Ahmad et al. (2019) also observed that abusive supervision is a stress factor in the subordinate's environment, which reduces employees' psychological capital.

Abusive supervision is however complex since it depends on the followers' perceptions of whether an act is abusive or not and this depends on several issues including culture, personality and the perceived power that the leaders hold over a follower (Tepper et al., 2007). In light of the aforementioned arguments, the present study is of the view that exposure to abusive supervisors erodes employees' psychological capital. Hence, this study hypothesizes that:

H2(c): Abusive supervision is negatively associated with employees' psychological capital.

2.3.3 Employee Psychological Capital and Organizational Resilience

Positive organizational behavior (POB) research focuses on the role of personal resources such as psychological capital in coping with organizational demands and enhancing performance (Bakker & Schaufeli, 2008). As noted above, psychological capital is composed of the positive states of self-efficacy, hope, optimism and resilience (Luthans et al., 2007; Wu & Nguyen, 2019). Self-efficacy is an individual sentiment of being able to take on and successful execute challenging duties, hope is characterized by perseverance towards goals and planning paths to succeed, optimism is about making positive attribution about now and future success while resilience is the capacity to sustain and bounce back after adversity to attain success (Luthans et al., 2007). Notably, positive psychological capital is a state rather than a trait. A trait is a quality that is enduring while a state involves learnable behavior, thoughts and actions (Tucci & Clouse, 2005).

Expectations have a self-fulfilling nature hence it is important to be positive (Blatt, 2009). Greater levels of positive affect and lower levels of negative affects among team members in a workplace has been found to contribute to greater resilience (Duchek, 2020). Positive emotions such as hope and pride make entrepreneurial teams more energized and enthusiastic while negative emotions erode the capacity to deal with challenges and thereby resilience (Blatt, 2009). Tucci and Clouse (2005) noted that the importance of psychological capital becomes clear when small firms have to overcome challenges in order to achieve success. These entrepreneurial challenges include among others changing

customer needs, legal constraints, funding constraints and employee turnover which are more pronounced in smaller entrepreneurial firms than larger ones and can cause an entrepreneur to revise timelines or change their business plan (Tucci & Clouse, 2005).

Positive psychological capital enhances the level at which a person utilizes their human and/or social capital and it is more important for entrepreneurial ventures who may have scarcity of other resources such as finances as compared to long existing organizations (Tucci & Clouse, 2005). Resilience hinges on the ability to be creative in utilizing scarce resources to overcome challenges (Blatt, 2009). Psychological capital is a crucial resource for entrepreneurial success (Tucci & Clouse, 2005). This study hence viewed that the foundation of organizational resilience lies in managing employee strengths particularly, their psychological capital which sets an organization up for success even in adverse times. This present study therefore suggested that under challenging conditions, organizations with high employees' psychological capital are more resilient. Hence, this study hypothesized that:

H3: Employee psychological capital is positively associated with organizational resilience.

2.3.4 Moderating Role of the Fear of COVID-19 on the Relationship Between Leadership Styles and Employee Psychological Capital

Times of crisis are characterized by a myriad of negative emotions such as fear, sorrow and confusion which often erode individual self-concept (Bligh et al., 2004). COVID-19 is a deadly disease that raises people's anxiety/ fear of mortality (Hu et al., 2020). Hu et al. (2020) noted that COVID-19 triggered anxiety varies from person to person and from day to day. Trougakos et al. (2020) argue that in situations wherein the apparent threat is uncontrollable such as in the current COVID-19 crisis, people are more likely to withdraw from the situation by suppressing their emotions. Suppressing emotions leads to a decreased sense of autonomy and loss of control (Grandey et al., 2015). Followers emotionally and symbolically, restore their own sense of coping capacity by identifying remarkable qualities in a leader and linking themselves to a seemingly effective leader (Bligh et al., 2004).

It may not be always possible for followers to identify and link up with leaders to cope with fear during a crisis. Chong et al. (2020) found that COVID-19 led many organizations to implement partial to full time telework for their employees to minimize risk of transmission of the virus. Low interpersonal connections from social isolation during the COVID-19 pandemic has been associated with increase in depressive symptoms (Wanberg et al., 2020). On the extent to which death exposure triggers negative emotions, literature indicates that feeling valued can buffer the negative influences of fear associated with mortality salience (Hu et al., 2020; Shockley et al., 2020). For the leadership styles under this study's focus, past research shows the following findings.

Transformational leadership leads to lower levels of anxiety in employees in the long run (Nielsen et al., 2019). This study based in Norway, operationalized anxiety as a negative emotion composed of a state of inner turmoil and nervous behavior, experienced by employees from time to time. Nielsen et al. (2019) noted that transformational leadership made followers feel confident, reduced power asymmetry perceptions and allowed employees to vent issues, which reduced their anxiety. Transformational leadership could influence employees' anxiety directly or indirectly through psychological linkages which are under researched (Nielsen et al., 2019). Similarly, Nielsen et al., (2008) found a reciprocal relationship between followers well-being and active and supportive leadership style. Notably, leaders change their behaviors from one follower to another to offer more or less support based on the follower's level of anxiety (Nielsen et al., 2019). Hence, the present study hypothesizes that:

H4 (a): COVID-19 fear moderates the positive relationship between transformational leadership and employee psychological capital, such that the association is stronger when fear of COVID is high versus low.

Directive behavior among leaders is prevalent during crisis and is aimed to issue clear directions, structure tasks and elicit compliance (Stoker et al., 2019). Directive leadership influences anxiety directly or indirectly through psychological links (Stoker et al., 2019). A directive leader is decisive (Bowers et al., 2017) and decisiveness reduces felt stress and anxiety among employees (Mulki et al., 2012). Mulki et al. (2012) operationalized decisiveness as an individual trait where leaders are confident in making decisions when

faced with cognitive problem-solving situations. According to this study, anxiety reduced when employees believed they got adequate directions. Conversely, when employees sensed supervisors' indecisiveness, they lost confidence in their ability to guide them and experienced more uncertainty and anxiety (Mulki et al., 2012).

On the contrary, directive leaders have been viewed to overwhelm employees and increase pressure in the workplace (Peterson, 1997). By advocating for a specific position without allowing for a discussion of alternatives, leaders interfere with the cognitive processing and judgement process of individual members within the organization (Peterson, 1997). Directiveness however is composed of two forms including process and outcome directiveness, hence whether a leader interferes with the cognitive process of employees depends on the form of directiveness used (Peterson, 1997). Chen et al. (2017) also noted that directiveness is not coercive but depends on how cultures perceive directions. Notably, leaders differ in the way they behave towards subordinates based on the organizational culture affecting how employees relate to authority (Stoker et al., 2019). The present study hypothesizes that:

H4 (b): COVID-19 fear moderates the positive relationship between directive leadership and employee psychological capital, such that the association is stronger when fear of COVID is high versus low.

Abusive supervision is a social problem that exists in various social relationships including the supervisor-subordinates relationship (Liao & Liu, 2015). The deleterious effects of abusive supervision on employees include exposure to stress, anxiety and sickness absenteeism (Kelloway et al., 2012). Other scholars also note the effects of abusive supervision whereby greater levels of anxiety and job strain in subordinates are experienced (Nielsen et al., 2008; Pyc et al., 2017). Social support is a factor known to moderate job strain and this includes quality supervisor support (Bakker & Demerouti, 2007).

Abusive supervision undermines psychological capital accumulation among subordinates but this can explicated by cognitive and motivational factors among subordinates (Liao & Liu, 2015). COVID-19 anxiety causes people to suppress emotions and this has detrimental effects on psychological needs fulfillment which negatively affects both individual well-

being and work outcomes however quality workplace relationships minimize COVID-19 health anxiety (Trougakos et al., 2020). Abusive supervision is a negative antecedent of psychological capital in a social interacting process (Liao & Liu, 2015). Some people are however more anxious of COVID-19 than others (Yan et al., 2021). Hence, this study hypothesizes that:

H4(c): COVID-19 fear moderates the negative relationship between abusive supervision and employee psychological capital, such that the association is stronger when fear of COVID is high versus low.

2.3.5 Mediating Role of Employees' Psychological Capital on the Relationship Between Leadership Styles and Organizational Resilience

Research indicates that individuals with high psychological capital have a strong belief in their ability to achieve their goals, they form positive anticipations in dealing with demanding situations and they positively contribute to harmonizing adverse situations (Ahmad et al., 2019; Luthans et al., 2007). Avey et al. (2011) contend that a positive mindset has value in enhancing relationships and well-being. Psychological capital is a form of intangible capital that facilitates work outcomes and includes positive psychological resources (Avey et al., 2011; Pitichat et al., 2018).

Psychological capital is a resource variable that is amenable to situational influences such as leadership (Ahmad et al., 2019). Supervisors are custodians of resources that facilitate employee achievement in the job (Avey et al., 2021). Subordinates depend on supervisors for key resources among them, promotions, raises and even continued employment (Tepper et al., 2007). Immediate supervisors can develop or drain (as in abusive supervision) followers' positive psychological states and resources such as psychological capital (Avey et al., 2021).

Hobfoll (2002) postulated that in line with JD-R theory, when individuals have psychological resources they are more likely to have specific resources to fit job demands or can generate resources that can assist them to develop resources that can fit demands. The positive nature of psychological capital triggers positive affective states that broaden thought action repertoires hence employees are likely to have positive work attitudes (Avey

et al., 2021). Similarly, when employees work in a high stress environment, it drains their resources and the employment experience suffers (Avey et al., 2021).

Literature indicates that psychological capital denotes a state that can be developed (Luthans et al. 2010) and transferred from leaders to employees where the latter are taught how to face challenges constructively (Walumbwa et al., 2010). Avey et al. (2021) underscore that psychological capital has emerged as an important mediating variable in leadership literature. Fang et al. (2019) found that psychological capital mediated organization wide interventions such as leadership and organizational consequences as an important psychological resource. Mediators of abusive supervision-employee outcomes are however scant in literature (Avey et al., 2021).

Research on interpersonal relationships indicates that individuals apply different relational schemas towards others, and this affects the nature of their relationships (Reis, Collins & Berscheid, 2000). This research suggested that under disruption and stressful environment caused by COVID-19 pandemic, organizations with employees with high psychological capital would be more resilient than those without. This present study therefore argues that some leadership styles could enhance employees' psychological capital more than others and this is discussed in relation to transformational leadership below.

Mechanisms and conditions through which transformational leadership leads to beneficial work behaviors have been vastly discussed in literature however psychological linkages through which employees are motivated to perform better remain under-researched (Aryee et al., 2012; Le, 2020). According to Le (2020), the positive effects of transformational leadership on psychological capital dimensions are such that: a) individualized consideration based on counselling, mentoring and coaching enables employees to build self confidence in their abilities hence improve *self-efficacy*, b) constructive advice and feedback coupled with a positive vision enables employees to feel *optimistic*, c) high trust relationship between employees and supervisors helps employees build *hope* by establishing both their will power and their way power, d) employees are also stimulated to look at challenges as opportunities and this builds their *resilience.* Previous research has shown the mediating role of employees' psychological capital on the positive relationship between transformational leadership and work outcomes such as organizational citizenship

behavior (Le, 2020). With reference to organizational resilience as a work outcome, this present study hypothesized that,

H5 (a): *Employee psychological capital mediates the positive relationship between transformational leadership and organizational resilience.*

Directive leadership is prevalent in cultures that characterize acceptance of hierarchy whereby the leader holds the most decision power and requires the respect of well-defined rules (Lonati, 2020). Directive leadership focuses on establishing top-bottom goals and is an effective style to achieve organizational outcomes (Islam et al., 2018). Directive leadership has a neural connotation and corresponds to non-participative behavior and not oppression or despotism (Lonati, 2020). A directive leader may have a training and achieving focus and they enable followers to be successful (Chen et al., 2017). Followers are guided, inspired and facilitated to set and achieve challenging goals (Chen et al., 2017) hence this may positively impact employees' psychological capital. Directive leadership is achievement-oriented and expects continuous improvement, excellence and shows confidence in follower's abilities hence enabling followers to build confidence in themselves (Chen et al., 2017).

A negative perspective of directive leadership however exists in literature. Gyu Park et al. (2017) in a study of large-sized firms based in South Korea found that directive leadership negatively relates to psychological capital. Generally, very little research relates directive leadership to employees' psychological capital. Researchers have also noted that directiveness is perceived differently between cultures (Chen et al., 2017; Lonati, 2020). This present research therefore viewed directive leadership as inspirational to employees, helping them build confidence in their abilities to achieve goals and hence hypothesized that,

H5 (b): *Employee psychological capital mediates the positive relationship between directive leadership and organizational resilience.*

Abusive supervision drains followers' positive psychological states and resources including psychological capital (Avey et al., 2021). Avey et al. (2021) found that abusive supervision reduced employees' psychological capital leading to deterioration in

psychological well-being, job dissatisfaction and general ill health. Ahmad et al. (2019) found that employees' psychological capital mediated the relationship between abusive supervision and organizational citizenship behavior. Abusive supervision is not only a source of demand on employees which leads to depletion of personal resources (Avey et al., 2021), but also affects employees' constructive behavior in the workplace (Ahmad et al., 2019).

Coping with an abusive boss requires personal resources expenditure and reduces capacity for constructive work behavior (Ahmad et al., 2019). Specific personal resources that employees spend to deal with abusive bosses include, time that goes into managing the work environment, sense of loss of control of their environment and the negative emotional impact of abuse (Ahmad et al., 2019). This present study therefore posits that subordinates experiencing high job demands will be depleted of their own personal resources leading to them withdrawing from giving their best at the workplace hence negatively affecting organizational resilience. Hence, this present study hypothesized that:

H5 (c): *Employee psychological capital mediates the negative relationship between abusive supervision and organizational resilience.*

2.3.6 Moderated Mediation Effect of Leadership Styles on Organizational Resilience Through Employees' Psychological Capital Depending on Employees' Fear of COVID-19

Studies on resilience often propose particular ways of arranging or accumulating resources to create resilience (Stoverink et al., 2020; Teo et al., 2017). It has not however been fully explored to what extent resources including leaders and followers promote resilience and how they need to be configured to achieve optimal outcomes. Developing adaptive capacity which is a key tenet of organizational resilience is argued to be derived from leadership, decision making structures and the degree of flexibility that an organizational culture promotes (McManus et al., 2008).

While most organizations have scarce resources, leveraging more on the little resources available can contribute to capacity for resilience (Pal et al., 2014). For instance, human resources are key intangible resources that can be leveraged however this is not easy since

understanding connections among the human resources system and competitive performance systems is complex (Pal et al., 2014). A pattern of interrelations between resources is therefore needful. This study proposes that organizational resilience is complex hence there is need for more detailed understanding of the mechanisms underlying resilience and what they depend on, and this is discussed below.

According to Fang et al. (2019) psychological capital could play a mediating role that transforms organization wide interventions such as leadership and organizational consequences as an important psychological resource. Previous research found that psychological capital mediates the relationship between authentic leadership and innovative work behavior (Purwanto et al., 2021). Guo et al. (2018) in their study of leadership styles and employee creativity found that employees' psychological capital reduced the feelings of fear from authoritarian leaders. Employees' psychological capital was also found to mediate the negative relationship between abusive supervision and employee outcomes such as job satisfaction, psychological well-being and general health (Avey et al., 2021).

Anxiety/fear is a state of distress in reaction to a stimuli with potential for undesirable outcomes and was identified as a critical psychological mechanism that affects both work place and community productivity negatively (Hu et al., 2020). Hu et al. (2020) found that mortality salience caused by COVID-19 triggered feelings of anxiety and certain leadership styles such as servant leadership reduced the negative impact of state anxiety on job engagement. Hu et al. (2020) noted that employees do not face challenges alone during a crisis and feeling valued by supervisors can reduce the negative influence of anxiety during COVID-19 pandemic crisis. Leaders hence have a role to help employees navigate through anxiety and be engaged positively in their work.

Accordingly, this present study utilized a moderated mediation model (Preacher et al., 2007) to jointly examine fear of COVID-19 as the moderator on the relationship between leadership styles and employees' psychological capital and the later as the mediator between leadership styles and organizational resilience. A moderated mediation occurs when the strength of an indirect effect is contingent on the level of another variable (Preacher et al., 2007). This study proposed that achieving organizational resilience

requires a moderated mediation approach for a more detailed understanding of the mechanisms underlying organizational resilience and what they are contingent on.

Therefore, this study hypothesized that:

H6: The meditated effect of leadership style on organizational resilience via psychological capital is moderated by fear of COVID-19, such that the mediation effects are stronger when fear of COVID is high versus low.

The summary of the study hypotheses is shown in Table 2.1 below.

Table 2.1: Summary of Hypotheses

Association	**Hypotheses**
Leadership styles and organizational resilience	*H1 (a): Transformational leadership is positively associated with organizational resilience.* *H1 (b): Directive leadership is positively associated with organizational resilience.* *H1c: Abusive supervision is negatively associated with organizational resilience.*
Leadership styles and psychological capital	*H2 (a): Transformational leadership is positively associated with employee psychological capital.* *H2 (b): Directive leadership is positively associated with employee psychological capital.* *H2(c): Abusive supervision is negatively associated with employee psychological capital.*
Employees' psychological capital and resilience	*H3: Employee psychological capital is positively associated with organizational resilience.*
Leadership styles and employees' psychological	*H4 (a): COVID-19 fear moderates the positive relationship between transformational leadership and employee psychological*

capital moderated by fear of COVID-19	*capital, such that the association is stronger when fear of COVID was high versus low.* *H4 (b): COVID-19 fear moderates the positive relationship between directive leadership and employee psychological capital, such that the association is stronger when fear of COVID-19 was high versus low.* *H4(c): COVID-19 fear moderates the negative relationship between abusive supervision and employee psychological capital, such that the association is stronger when fear of COVID-19 is high versus low.*
Leadership styles and organizational resilience mediated by employees' psychological capital	*H5 (a)*: *Employee psychological capital mediates the positive relationship between transformational leadership and organizational resilience.* *H5 (b)*: *Employee psychological capital mediates the positive relationship between directive leadership and organizational resilience.* *H5 (c)*: *Employee psychological capital mediates the negative relationship between abusive supervision and organizational resilience.*
Leadership styles and organizational resilience mediated by employees' psychological capital which is moderated by fear of COVID-19	*H6: The meditated effect of leadership style on organizational resilience via psychological capital is moderated by fear of COVID-19, such that the mediation effects are stronger when fear of COVID-19 was high versus low.*

Source: Researcher, 2022

2.4 Summary of Research Gaps

The key research gaps identified in existing studies, which motivate this research, are summarized in Table 2.2 below.

Table 2.2: Summary of Research Gaps

Date of publication & authors	Objective	Methods	Theory	Findings	Research gaps
2011 Sullivan-Taylor & Branicki	This article is a first step towards addressing a gap in organizational resilience research by examining how SMEs manage the threat and actuality of extreme events.	Qualitative using 11 focus groups in UK	RBV	Resourcefulness was a key barrier to SME resilience. -Technical systems were not a major priority for SMEs	The study forms the basis for survey work examining the extent to which resilience is an organizationally contingent concept
2017 Teo, Lee & Lim	This study developed a relational activation model of resilience	Qualitative study based on SARS crisis in Singapore.	RBV & Networks theory	This study developed a Relational Activation of Resilience model that linked leadership to resilience.	The theoretical model developed needs to be tested empirically.

2017 Duchek et al.	The paper aimed to discuss relationships and interactions of the different resilience stages as well as main antecedents and drivers	Conceptual paper	RBV	The paper suggested three successive resilience stages (anticipation, coping, and adaptation) and gave an overview of underlying capabilities that together form organizational resilience	This was a conceptual paper no empirical tests were conducted hence the need to test empirical hypothesis.
2019 Nielsen et al.	This study aimed to determine the direction of association between perceived transformational and laissez-faire leadership and anxiety among subordinates	Structural Equation Modeling	Theory of rosy/gloomy perceptions	Baseline low levels of state anxiety were associated with reporting the immediate leader as less transformational and more laissez-faire six months later	This survey only had a response rate of 32% and used self-report measures only which can be improved upon subsequently.
2017 Chen at al.	This research theorized and tested a new form of hierarchical approach to leadership called directive-achieving leadership.	Multi-level mediation	Role theory	The findings revealed that directive-achieving leadership had a positive mediated relationship with subordinate job performance.	Although the positive effects of directive-achieving leadership on subordinate outcomes we validated, this research does not shed light on the dynamics of such positive effects.

Stoker et al. 2019	This was a multi-level event study on leadership behavior based on the 2008 Financial crisis	Multi-level event study	Threat-rigidity hypothesis	Findings revealed that the financial crisis led to an increase in directive behavior and the effect was stronger in the manufacturing sector and in countries with high power distance.	There is a need for more leadership studies that analyze the effect of exogenous events on leadership behavior.
2015 Frieder, Hochwarter & DeOrtentiis	The purpose of this study was to examine individual factors that attenuate the negative affective and behavioral reactions stemming from perceived abusive supervision	Moderated hierarchical regression analysis.	JD-R theory	The study found that individuals who exhibit proactive voice behaviors and perceive that they are better able to manage their resources will experience less dissatisfaction, emotional exhaustion, turnover intentions, and reductions in work effort when faced with perceived supervisory abuse.	The study was limited to using self-report measures only hence the need for a multi-source design.

2019 Wu & Nguyen	The purpose of the study was to explain PsyCap and its antecedents and outcomes.	Meta-analytic approach	Social exchange theory	Results show that leadership styles and organizational support are antecedents and desirable work attitudes are consequences of PsyCap. Employees' characteristics significantly moderated the relationship between PsyCap and work attitudes.	This study examined only leadership (authentic, ethical and abusive supervision) and POS as antecedents of PsyCap. There are many suggested antecedents of PsyCap such as other types of leadership (e.g. transformational leadership), individual differences (e.g. self-esteem, proactive personality), job characteristics and demographics.
2020 (Lupșa et al.)	The purpose of this paper was to evaluate the overall effectiveness of interventions designed to enhance psychological capital (PsyCap), well-being, and performance.	Random effects meta-analysis using the Comprehensive Meta-Analysis	Job-demands resources model	Our results show that resilience, self-efficacy, and optimism are the most suitable personal resources to be developed through interventions. The effectiveness of	The study is limited because it used a small sample of 41 groups

				the PsyCap interventions on well-being and performance is also significant	
2018 Newman et al.	This article examined the psychological processes through which diversity climate influences the work attitudes of refugee employees in Australia.	Moderated mediation analysis	Conservation of resources theory (COR) and rejection sensitivity theory	Drawing on survey data from 135 refugees in employment in Australia, diversity climate was found to positively influence the affective organizational commitment of refugee employees through enhancing their psychological capital.	The use of self-report data from a single source resulted in the potential for common method bias. Another limitation of the study relates to the fact that the researchers did not control for the industry in which the employees worked or their position in the organization.
Yan et al. (2021)	This study aimed to investigate when hospitality workers' COVID-19 risk perception affects their likelihood of having depressive symptoms.	Logistic regression analysis	Transactional theory of stress and coping	The results indicate that job satisfaction weakens the link between workers' COVID-19 risk perception and their likelihood of depressive symptoms while the number of children exacerbates this link	Future research may consider some psychological feelings as mediators, such as conspiracy theory and religiosity as possible factors that shape the cognitive appraisal process.

Trougakos at al. (2020)	Aimed to advance and test a model predicting that CovH anxiety prompts individuals to suppress emotions, which has detrimental implications for their psychological need fulfillment.	Path analysis	Transactional stress theory & self-determination theory	Consistent with predictions, CovH anxiety was found to impair critical work (goal progress), home (family engagement) and health (somatic complaints) outcomes due to increased emotion suppression and lack of psychological need fulfillment	A potential limitation is that all measures came from the same source, raising the potential for same-source measurement biases.
2020 Hu & He	This study analyzes how and when COVID-19-Triggered Mortality Salience Relates to State Anxiety, Job Engagement, and Prosocial Behavior	Bayesian MSEM analysis	Terror management theory	The research showed that mortality salience concerning COVID-19 was positively related to employees' state anxiety and death-specific anxiety.	The study was unable to test employees' adjustment in the postcrisis world, but it would be a significant extension to the crisis management research to evaluate how employees build resilience during and after the crisis

Source: Researcher, 2022.

2.5 Conceptual Framework

The conceptual framework below (Figure 2.1) depicts the proposed relationships among

Figure 2.1: Conceptual Framework

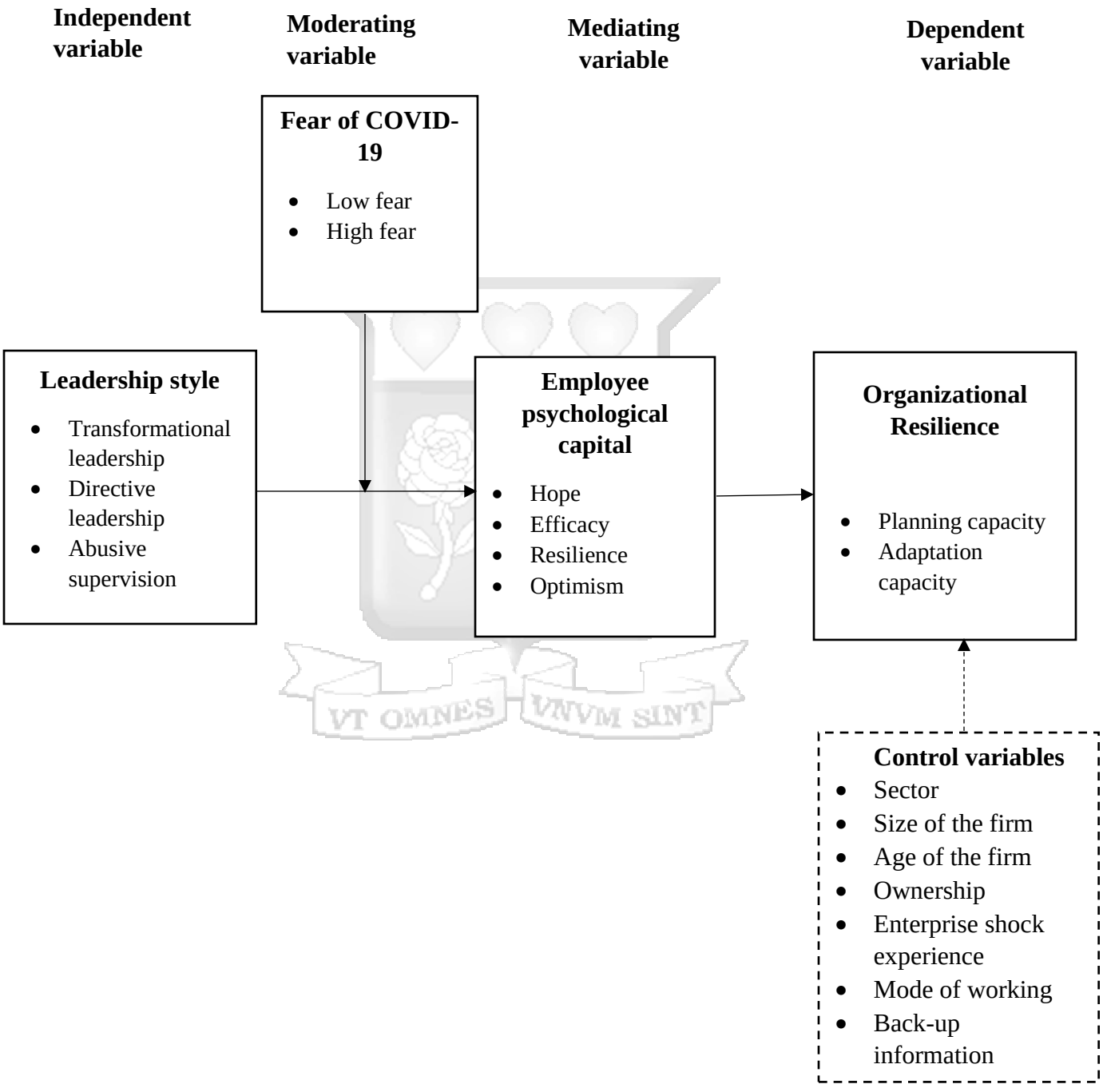

Source: Researcher, 2022

2.5.1 Operationalization of the Study Variables

In this section, the measure to assess each variable outlined in the conceptual framework is summarized in Table 2.3 below.

Table 2.3: Operationalization of study variables

Variable	Constructs	Operational definition/ Indicators	Measurement Scales	Source
Independent variable: Leadership styles	Transformational leadership	Transformational leadership style is based on inspiration, idealized influence, motivation, intellectual stimulation and individualized consideration (Bass, 1999)	Ordinal scale. 5- point Likert scale. Tool: Multifactor Leadership Questionnaire Form (MLQ)	Mindgreen Inc: Avolio & Bass (2004)
	Directive leadership	A directive leader is in charge, makes decisions and clearly communicates (Bowers et al., 2017).	Ordinal scale. 5- point Likert scale. Tool: Directive Leadership Scale of Litwin and Stringer	Litwin and Stringer (1968), as in (Euwema et al., 2007).
	Abusive supervision	Abusive supervision is the perception of subordinates regarding the extent to which supervisors engage in consistent verbal and non-verbal hostile behavior excluding	Ordinal scale. 5-point Likert scale. Tool: Abusive Supervision scale.	Tepper (2000).

		physical contact. (Tepper, 2000).		
Moderating Variable:	Fear of COVID - 19	COVID-19 fear represents feelings of apprehension about having or contracting COVID-19 virus (Trougakos et al., 2020)	Ordinal scale. 5-point Likert scale. Tool: FCV-19S	Ahorsu et al. (2020).
Mediating variable:	Psychological capital	A form of intangible capital that facilitates work outcomes and includes positive psychological resources such as hope, efficacy, resilience, and optimism (Luthans et al., 2007).	Ordinal scale. 5-point Likert scale. Tool: Psychological Capital Questionnaire (PCQ)	Luthans et al. (2007).
Dependent variable	Organizational resilience	How well an organization manages situation awareness, key stone vulnerabilities and adaptive capacity in a complex environment (McManus, 2008)	Ordinal scale. 5- point Likert scale. Tool: BRT-13 (Whitman et al., 2013).	Whitman et al. (2013)

Control variables for the dependent variable	Sector	Primary, secondary, tertiary	Categorical variables	
	Size of the firm	Number of employees Monthly turnover	Categorical variables	
	Age of the firm	Number of years of operation	Continuous variables	
	Ownership	Family owned. Partnership Group owned. Cooperative Private limited company Public limited company	Categorical variables	
	Prior enterprise shock experience	Yes/no	Categorical variable	
	Mode of working	Online, physical, hybrid	Categorical variable	
	Back-up information technology facilities	Yes/no	Categorical variable	

Source: Researcher, 2022

Chapter Three

Research Methodology

3.1 Introduction

This chapter encompasses various critical components of this research, including research philosophy, research design, population and sampling methods, data collection procedures, data analysis techniques, considerations for research quality, and ethical issues.

3.2 Research Philosophy

This research adopted positivism research philosophy to deductively analyze the influence of leadership styles, fear of COVID-19 and psychological capital on the organizational resilience of SMEs in Kenya. Positivism is based on the works of Auguste Comte and holds that knowledge creation should be limited to what can be observed and measured (Bhattacherjee, 2012). Positivist methods such as survey research and laboratory experiments are aimed at theory testing as opposed to interpretive methods such as ethnography and action research that are aimed at theory building (Bhattacherjee, 2012).

Bryman, (2016) posited the following five principles of positivism as an epistemological position; a) only knowledge confirmed by the senses can be warranted as knowledge, b) the purpose of theory is to generate hypotheses that can be tested and allow explanations of laws to be assessed, c) knowledge is arrived at by gathering facts which provide basis for laws, d) science presumably must be conducted in a value free manner and, e) there is a distinction between scientific and normative statements and the former are the true domain of the scientist.

Based on these positivism principles, the present research hence generated hypotheses based on a priori theory, tested the relationships between variables, established controls for hypothesis testing, operationalized concepts for quantitative measurement and generalized findings. This research design assumed the independence of the researcher. This meant that the truth and meaning exists in the external world hence the present research adopted objective ontology. Bryman (2016) indicated that objectivism is an ontological position that implies that social phenomena is composed of external facts that are beyond influence.

3.3 Research Design

A research design provides the framework for collection and analysis of data (Memon et al., 2020). It reflects decisions attached to expressing causal connections between variables, generalizing larger populations, understanding behavior in its specific social context and having a temporal appreciation of social phenomena and their interconnections (Bryman, 2016). There are generally five quantitative research designs to consider, including experimental, cross-sectional/survey, longitudinal, case study and comparative designs (Bryman, 2016).

The present study employed a cross-sectional survey design with quantitative data collection characterized by the collection of data from a sample of cases at a single point in time. This design aims to gather quantifiable data to examine patterns of association between variables, although it is important to note that it cannot establish causality, only correlation (Bryman, 2016). Data in this study were collected using standardized questionnaires or structured interviews, consistent with the practices of this design (Bryman, 2016). The overall theoretical orientation adopted was deductive, utilizing positivism practices and norms to test reality and embody an objective perspective.

3.4 Population and Sampling

The population and sampling methods are discussed below.

3.4.1 Population

A population refers to the universe of units from which a sample is selected (Bryman, 2016). In this study, the population of interest consists of licensed small and medium-sized enterprises (SMEs) in Kenya. According to the latest Micro, Small and Medium-sized Enterprises (MSMEs) report, there are 121,719 licensed SMEs in Kenya (Kenya National Bureau of Statistics, 2016). It is important to note that micro-enterprises are excluded from this study because they are primarily operated by owners with few or no employees, as indicated in the MSME report (Kenya National Bureau of Statistics, 2016).

3.4.2 Sampling

Sampling is necessary for survey research since it is not always possible to collect data from an entire population (Memon et al., 2020). A sample is a sub-set of the population selected based either on probability or non-probability approaches (Bryman, 2016). There is need to ensure an appropriate sample size is drawn so as to ensure validity of conclusions (Memon et al., 2020). Various factors are considered in deciding on an appropriate sample size including, research design, type of analysis in terms of the analytical method and model complexity, data analysis program and sample size used for similar studies among others (Memon et al., 2020).

For a multilevel study such as the current one, with data at the organizational level (level 2) and at the individual (level 1), there must be enough organizations (first stage of sampling), and enough individuals in each organization (second stage) to reach appropriate statistical power (Molina-Azorín et al., 2020). For the 1st stage sampling, quota sampling method was used to determine the proportionate number of SMEs per county. SMEs sampled were drawn from three counties namely, Nairobi, Nakuru and Kiambu. These counties together form 61.2% of licensed SMEs in Kenya (Kenya National Bureau of Statistics, 2016). These counties were also selected based on a similar risk profile for COVID-19 infections, such that they were all marked as red zones (Ministry of Health, 2021) symbolizing high infection rates hence they made a good choice for testing for resilience.

Quota sampling (used in this study 1st stage of sampling) is a non-probability sampling technique that maintains proportional representation of different attitudinal features (Acharya et al., 2013) . Its main advantage is that it ensures the sample is distributed to the same extent as the investigator desires (Acharya et al., 2013), in this case to mirror the county proportions of SMEs present in the population.

For the 2nd stage of sampling, purposive sampling was used to select employees within the SMEs for this study. Purposive sampling involves the following steps; determining the data needed based on the research problem, defining the desired qualities of the informants, finding informants based on defined qualities, using appropriate data gathering techniques

and documenting bias inherent in purposive sampling (Tongco, 2007). Informants for this study were employees working in SMEs in Kenya. The knowledgeability criterion used for these employees was that the respondents had a role in risk management, crisis management, emergency/disaster management and/or business continuity. These were the knowledgeability criteria suggested for the relevant functional unit of a firm indicated in the BRT questionnaire (The resilient Organization, 2013). Additionally, the respondents needed to have been working within the SME from the onset of COVID-19 in Kenya. Kenya announced the first case on COVID- 19 on 12th March 2020 (MOH, 2020). Additionally, respondents who met these knowledgeability criteria needed to freely consent to participate in this study.

The minimum sample size required for statistical power of the model for this multilevel study was considered to be at least 100 clusters of employees nested in SMEs. According to Preacher et al. (2010) at least 100 clusters is the recommendation for multilevel structural equation modelling using Muthen's maximum likelihood (MUML) estimator with the two matrix method of estimating levels 1-1-2 models. This present study utilizes 301 clusters. Researchers however contend that the robustness of a sample depends largely on careful selection of respondents than in the sample size (Memon et al., 2020; Mooi et al., 2018).

For many studies on leadership styles, it is employees who provide information about managers they serve under to reduce social desirability bias that would occur if managers reported about themselves (Molina-Azorín et al., 2020). More than one employees per firm is desirable for multilevel research and between two and five employees per firm are commonly used (Molina-Azorín et al., 2020). This study used two subordinates to report about a leader's style as similarly done by Judge and Bono (2000).

In addition to these parameters, other sample size calculations can be conducted in addition to minimum sample size calculations to ensure power of the model (Memon et al., 2020). For this study, Yamane (1967) formula as in (Israel, 2003) was used to calculate the sample size of SMEs, n from the entire population of 121719 SMEs.

$n= N/(1+N(e)^{2)}$

Where: n= desired sample size N= Population e = margin of error at 5% (standard value of 0.05)

n= 121719/ $(1+121719(0.05)^{2)}$

n= 398

To cater for non-response, which is failure to collect data from units in the population that are selected to be in the sample (Stoop, 2005), 30% more firms were added to the sample to anticipate the problem of non-response as done in Bujang, (2021) study. 517 SMEs (398+ 0.30*398) were therefore sampled. Two employees per SME were needed to enhance objectivity hence a sample of 1034 respondents. The sampling design below was calculated based on Kenya National Bureau of Statistics (2016) data on SMEs who distribution is shown in Appendix 3.

Table 3.1 shows the distribution of the sample for each quota.

Table 3.1: SME sampling design

Sampled counties	**Number of SMEs '00**	**Representation**	**Total sample size per county**	**Total sample of employees per county**
1. Nairobi	164.53	165.53/328.6*517	261	522
2. Nakuru	73.87	73.87/328.6*517	116	232
3. Kiambu	88.76	88.76/328.6*517	140	280
4. Total	328.16		**517**	**1034**

Source: Researcher, 2022

3.5 Data Collection

Primary data was collected between the months of February and August 2022 via the use of interviewer and self-administered closed-ended questionnaires as the data collection tool. The unit of analysis was the SME. Questionnaires were administered by the researcher with the help of four trained research assistants who were paid for their services. Stoop (2005) noted that paid research assistants are usually more motivated to increase their coverage during primary data collection. Both interviewer and self-administered questionnaires were used for this present study. Such mixed modes of interviewer and self-administered questionnaires are widely used in surveys (Olson et al., 2021). For the purpose of the present study, there was no significant difference between the two modes of data collection used as seen in appendix 8, in the mean comparison tests.

The questionnaires distributed were preceded by a cover letter and ethical approval permit (See Appendix 1 & 7) which explained the type of data that the researcher aimed to collect and sought consent from the respondents to participate in this study. SMEs were purposely identified mostly through obtaining contacts and appointments from specific trainings and exhibitions forums organized by Kenya Private Sector Alliance, Kenya Association of Manufacturers, Kenya National Chamber of Commerce & Industry and Strathmore University Business School.

On the nature of the measurement tools used in the questionnaire, established and validated measurement tools were used for each variable. Transformational leadership was assessed on a five item Likert scale from strongly disagree to strongly agree using the Multifactor Leadership Questionnaire (MLQ) by Bass and Avolio (2004) based on four aspects namely, idealized influence, inspirational motivation, intellectual stimulation and individual consideration. Directive leadership was measured on a 5-point scale using the original Directive Leadership Tool of Litwin and Stringer (1968), as in (Euwema et al., 2007), abusive supervision was assessed using Tepper's (2000) abusive supervision questionnaire based on a five-point Likert scale. Employees' psychological capital was assessed using the Psychological Capital Questionnaire (PCQ) by Luthans et al. (2007) on a five-point Likert scale. Fear of COVID-19 was assessed using a five-item Likert scale using the fear of COVID-19 scale (FCV-19S) by Ahorsu et al. (2020) while organizational resilience was

assessed on a five-point Likert scale using the short version of the Benchmark Resilience Tool (BRT) by Whitman et al. (2013).

The flow of this study's multi-item questionnaire (see appendix 2) was such that it contained five sections. Respondents were supposed to fill all sections. Section one was on the respondent's bio data as well as firm profile information. Within this section, control variables such as enterprise size, age, shock experience and financial condition during the shock scenario Biggs (2020) were included. Section two captured leadership styles including transformational, directive and abusive supervision. Section three was on psychological capital while section four captured statements assessing fear of COVID-19. Section five captured statements assessing perceptions of organizational resilience. Social desirability test questions appeared randomly throughout section two to five. This included statements such as, for this item check 2, that assessed the extent to which the respondent was attentive while rating their perceptions as opposed to adopting a pattern to tick on a certain side of the rating scale for all responses.

Upon visiting an SME, respondents were identified by owners or managers involved in the areas of risk, crisis, emergency or business continuity management. Research assistants interviewed participants based on the questionnaire and where that mode was not possible, shared the google form link through the medium of WhatsApp, chat option in online meetings and email. Weekly reminders for submission of filled in questionnaires were made to respondents who chose to self-administer the questionnaire then went silent. Follow up was done via calls, WhatsApp or email depending on the mode they preferred to be contacted with. Some respondents opted out of their initial acceptance to participate, and their decision was respected. Other respondents filled their questionnaires after reminders were sent while others ignored reminders, and no more reminders were sent after the end of the data collection period. Data was collected for a period of seven months. Respondents were motivated to cooperate in this study by being promised a summary of the report should they request it.

3.6 Data Analysis

Data were coded after a successful download from google forms and successful data entry for the paper-based surveys into a Microsoft Excel format. Prior to conducting analysis,

the researcher checked for outliers and used listwise deletion for missing data. The researcher visualized the data by generating histograms for each variable to check for univariate outliers. Outliers with extreme responses were deleted across all items. Descriptive statistics that included determining the means, standard deviation, skewness and kurtosis for each variable were conducted to check for normality and indicate values that were typical for the distribution. These measures are recommended by Walker et al. (2010).

Correlation analysis was used to determine the strength of relationships among the variables. Variables for this study were predominantly measured using Likert-type scales. This is ordinal data and hence spearman's rho (p) was used to test whether the variables under study were related. Spearman's rho values usually lie between -1 and 1 and the closer the coefficient is to zero the weaker the association between the variables (Cooper & Schindler, 2014).

Confirmatory factor analysis was used to aggregate each variable. This is a common data reduction technique that aggregates a given set of items to a smaller set of factors based on bivariate correlation using principal component analysis technique (Bhattacherjee, 2012). Factor weights were then used to aggregate individual items of a construct into a composite measure. For adequate convergent validity, factor loadings of 0.50 or higher were required on a single factor (Walker et al., 2010), while for adequate discriminant validity factor loadings of 0.30 or less on all other factors was required (Bhattacherjee, 2012).

Data from SMEs was expected not to follow normal distribution as size of firm alone was not normally distributed (Goel & Randoy, 2003) and hence analysis required non-parametric methods of analysis that best fit these models. Therefore, to test the hypotheses multi-level structural models (MLSEM) were estimated using the GSEM function on Stata version 17 to test each hypothesis while accounting for multilevel data.

The equations for this study were follows:

i. Objective one on the relationship between leadership styles and organizational resilience:

   I. $\hat{OR} = \beta_{0ij} + \beta_1 XTL_{ij} + \beta_2 XDL_{ij} + \beta_3 XAS_{ij} + \sum_{i=1}^{q} f_i C_i + e_{ij}$

Where:

a. $\hat{OR}$ represents organizational resilience, XTL represents transformational leadership, XDL represents directive leadership and XAS represents abusive supervision.
b. Greek letters (β) to denote final fixed effects model parameters to be estimated empirically.
c. $_{ij}$ represents individual respondent i in cluster j.
d. $\sum_{i=1}^{q} f_i C_i$ represents control variables on the dependent variable which were coded as follows: Industry as C1, size of the firm as C2, age of the firm as C3, ownership as C4, enterprise shock experience as C5, mode of working as C6 and back up IT facilities as C7. This is derived from the long form of the equation $\widehat{M} = i_M + aX + f_1 C_1 + f_2 C_2 + f_3 C_3 + f_4 C_4 + f_5 C_5$.

e. e_{ij} represents the error term.

ii. Objective two on the relationship between leadership styles and employees' psychological capital:

II. $PSY = \beta_{0ij} + \beta_1 XTL_{ij} + \beta_2 XDL_{ij} + \beta_3 XAS_{ij} + e_{ij}$

Where:

a. PSY is employees' psychological capital, XTL represents transformational leadership, XDL represents directive leadership and XAS represents abusive supervision.
b. $_{ij}$ represents individual respondent i in cluster j.
c. e_{ij} represents the error term.

iii. Objective three on the relationship between employees' psychological capital and organizational resilience:

III. $\hat{OR} = \beta_{0ij} + \beta_1 XPSY_{ij} + \sum_{i=1}^{q} f_i C_i + e_{ij}$

Where:

a. $\hat{OR}$ represents organizational resilience and XPSY is employees' psychological capital.

b. $_{ij}$ represents individual respondent i in cluster j.

$\sum_{i=1}^{q} f_i C_i$ represents control variables on the dependent variable.

c. e_{ij} represents the error term.

iv. Objective four on the relationship between leadership styles and employees' psychological capital moderated by fear of COVID-19:

IV. $PSY = \beta_{0ij} + \beta_1 XTL_{ij} + \beta_2 XDL_{ij} + \beta_3 XAS_{ij} + \beta_4 XF*XTL_{ij} + \beta_4 XF*XDL_{ij} + \beta_4 XF*XAS_{ij} + e_{ij}$

Where:

a. PSY is employees' psychological capital, XTL represents transformational leadership, XDL represents directive leadership, XAS represents abusive supervision and XF represents fear of COVID-19.

b. $_{ij}$ represents individual respondent i in cluster j.

c. e_{ij} represents the error term.

v. Objective five on leadership styles and organizational resilience mediated by employees' psychological capital.

V. $\hat{OR} = \beta_{3ij} + \beta_1 XTL_{ij} + \beta_2 XDL_{ij} + \beta_3 XAS_{ij} + PSYM_{ij} + \sum_{i=1}^{q} f_i C_i + e_{ij}$

Where:

a. $\hat{OR}$ represents organizational resilience, ć is psychological capital of employees' mediation component, XTL represents transformational leadership, XDL represents directive leadership and XAS represents abusive supervision.

b. M = represent mediation.

c. $\sum_{i=1}^{q} f_i C_i$ represents control variables on the dependent variable.

d. $_{ij}$ represents individual respondent i in cluster j.

e. e_{ij} represents the error term.

vi. Objective six on the interactive relationship between leadership styles and organizational resilience mediated by employees' psychological capital which is moderated by fear of COVID-19:

VI. $M_{ij} = a_o + a_1\ XTL_{ij} + a_2\ XDL_{ij} + a_3\ XAS_{ij} + a_4 W_{ij} + a_5\ XTL_{ij}\ W_1 + a_6\ XDL_{ij}\ W_1 + a_7\ XAS_{ij}\ W_1 + \sum_{i=1}^{q} f_i C_i + e_{ij}$

VII. $O\hat{R} = ć_{0ij} + ć_{10} XTL_{ij} + ć_{20} XDL_{ij} + ć_{30} XAS_{ij} + bM_{ij} + \sum_{i=1}^{q} f_i C_i + e_{ij}$

Where:

a. $O\hat{R}$ represents organizational resilience, ć is psychological capital of employees' mediation component, XTL represents transformational leadership, XDL represents directive leadership and XAS represents abusive supervision.
b. M represents moderation.
c. W represents mediation
d. $\sum_{i=1}^{q} f_i C_i$ represents control variables on the dependent variable.
e. $_{ij}$ represents individual respondent i in cluster j.
d. e_{ij} represents the error term.

3.7 Research Quality

Three most important quality criteria in social sciences research include evaluation of reliability, replicability and validity (Bryman, 2016). Reliability is concerned with the question of whether the measures devised for concepts are consistent while replicability is concerned with spelling out research procedures in detail (Bryman, 2016). Validity on the other hand is concerned with the integrity of the conclusions generated from research (Bryman, 2016).

This research ensured internal validity by guarding against spurious correlations by including control variables. Bhattcherjee (2012) asserts that controls can be accomplished in various ways including a) manipulation using treatment and control groups, b) elimination by holding constant extraneous variables across treatments, c) inclusion by separately estimating the effects of extraneous variables on the dependent variable and d)

randomization by canceling out the non-systemic effects of extraneous variables. This study handled control variables by inclusion method.

Content validity was ensured by utilizing pre-established and validated measurement tools and scales. Internal reliability, which measures the consistency among different items within the same construct, was assessed following Bhattcherjee (2012). To evaluate internal reliability, Cronbach's alpha and composite reliability tests were employed, with a threshold value of 0.70 set as the cut-off for both tests (Christmann & Van Aelst, 2006).

Convergent validity was evaluated by analyzing the Average Variance Extracted (AVE) values. According to Fornell and Larcker (1981), AVE is considered satisfactory when its value is equal to or greater than 0.50. The indicator reliability of the measurement models was determined by assessing how much variance in each indicator is explained by its corresponding construct. This is deemed acceptable when item loading estimates fall between 0.5 and 0.7 (Hair et al., 2010).

Discriminant validity reflects the idea that if two or more constructs are distinct, valid measures of these constructs should not exhibit excessively high correlations. This principle was supported by Henseler et al. (2015). In this present study, both the Fornell-Larcker criterion and the heterotrait-monotrait (HTMT) ratio were employed to assess discriminant validity. Discriminant validity was confirmed when either of two conditions were met: first, the square root of the average variance extracted (AVE) for a construct exceeded its correlations with all other constructs; second, the HTMT value between indicators of two constructs was less than one (Henseler et al., 2015).

Pilot testing was done to ensure the research instrument as a whole functioned well. Bryman (2016) notes that pilot studies are important especially for self-administered questionnaires since researchers are not present to clear up any ambiguity should it arise. What constitutes an adequate sample size for a pilot study depends on the purpose of the pilot study which could be for feasibility reasons or preliminary scale or instrument development (Johanson & Brooks, 2010). The pilot study for this present research was composed of 60 respondents. This was considered sufficient based on as evidenced by previous studies (Ewertowski & Butlewski, 2021). Data analysis for the pilot study was conducted to check whether the quality statistics (reliability and validity) of the

measurement tools were met before proceeding with the main data analysis. Pilot data was not used alongside the main survey data.

3.8 Ethical Considerations

The researcher ensured that participation in the study was voluntary, seeking consent from respondents to participate at their own will. This was achieved through a comprehensive process where questionnaires were accompanied by a detailed cover letter. The cover letter informed the respondents about the purpose of the study and sought their informed consent for participation, emphasizing that their involvement was voluntary.

Further, to uphold ethical standards, no incentives or bribes were offered to coerce respondents into participating in the study. Moreover, participants were assured that their involvement would not cause any harm. Responses collected from the participants were treated with strict confidentiality, and the data was reserved for academic purposes only. Additionally, respondents were informed that if they requested access to the study's findings, the information would be made available to them, ensuring transparency and accountability.

Additionally, during data collection, the researcher observed the COVID-19 protocols relevant to Kenya to ensure a safe environment for both the respondents and the researcher. This included adherence to wearing protective masks and the sanitization of hands, among other measures. These precautions were essential in minimizing the risk of COVID-19 transmission during the data collection process.

Before initiating data collection, necessary ethical approvals were obtained from two authorities: the National Commission for Science, Technology and Innovation (NACOSTI) and the Strathmore University Institutional Ethics Committee (SU-IERC). Please refer to appendices 6 and 7 for further details.

Chapter Four

Presentation of Research Findings

4.1 Introduction

This chapter outlines the findings from the data analysis performed to address the research questions of the study. The analysis utilized the widely recognized reporting style for multilevel structural equation models to investigate direct relationships, as well as mediation and moderation hypotheses (Rappaport et al., 2019). Initially, we present the response rate, firm profile, and information about the respondents. Following this, we discuss the validity and reliability of the measurement model. Finally, we evaluate the structural models to determine the significance of the proposed relationships.

4.2 Preliminary Analyses

First, the responses from the paper and online-based survey tools were aggregated. Data screening was then conducted in order to ascertain the appropriateness of using multilevel modelling. Psychometric assumptions on missing data, normality of data distribution and common method bias were assessed. Examination of missing data led to 34 responses in this study being discarded. Skewness rating outside +/- 2 (Hair et al., 2010) were assessed since they have the potential to restrict linear data analysis techniques. Two aspects of psychological resilience labelled res 4 and res 5 were discarded since they were highly skewed. Common method bias which refers to the variance attributable exclusively to the measurement procedure as opposed to the actual variables the measures represent was assessed using Harman's single factor test (Podsakoff et al., 2003). The results using principal component factor analysis showed that a single factor was extracting 31.363% of the total variance and since this is less than the 50% threshold (Podsakoff et al., 2003) there was no major threat of common method bias.

4.2.1 Response Rate

A response rate of 58.22% was achieved from the sample of 517 SMEs and 1034 respondents. This response rate was sufficient to carry out data analysis (Madi Odeh et al., 2021). The study ended up with a usable data structure of 602 employees from 301 SMEs. This data structure represents dyads. The response rate information is summarized in Table 4.1 below.

Table 4.1: Sample Response Rate

Details	Frequency	%
SMEs		
Total number of SMEs sampled	517	100
Total number of usable SMEs responses	301	58.22
Employees		
Total number of respondents sampled	1034	100
Total number of respondents	681	65.86
Less: Missing values on variables	34	3.28
Less outliers	45	4.35
Number of observations used in the analysis	602	58.22

Source: Primary data

4.2.2 SME Firm Profile Information

The SMEs that participated in this study exhibited the following characteristics, highlighting the highest proportions in each category: a) *Location*: 48.5% of the firms were based in Nairobi County. b) *Employee Count*: 29.57% of the firms employed between 90 and 99 individuals. c) *Monthly Turnover*: 56.48% reported a monthly turnover exceeding Ksh 1,000,000. d) *Age of Firms*: 27.91% of the firms operated for 4 to 10 years. e) *Sector*: 70.07% of the firms belonged to the service sector. f) *Mode of Working: During COVID-19*: 43.85% operated remotely during the pandemic. g) *Legal Structure*: 46.13% were registered as partnerships. h) *IT Backup Facilities*: At the onset of the COVID-19 pandemic, 76.74% lacked backup IT facilities. i) *Growth Trajectory*: 43.52% described their growth trajectory as stable, neither growing nor declining. j) *Profitability:* 52.82% reported being moderately profitable. k) *Severity of COVID-19*: 38.88% indicated that the pandemic posed a threat severe enough to potentially shut them down permanently. l) *Previous Shock Experience:* A significant majority, 81.73%, had not experienced any prior shocks. The complete profile information for these SMEs is detailed in Table 4.2.

Table 4.2: Firm demographic characteristics

Details	Frequency	%
County		
Nairobi	146	48.50
Kiambu	85	28.24
Nakuru	70	23.26
Number of employees		
10-19 employees	71	23.59
20-29 employees	53	17.61
30-39 employees	16	5.32
40-49 employees	24	7.97
50-59 employees	19	6.31
60-69 employees	8	2.66
70-79 employees	9	2.99
80-89 employees	11	3.65
90-99 employees	89	29.57
Monthly turnover		
Less than Ksh 50,000	33	10.96
Ksh 50,000 to 200,000	41	13.62
Ksh 200,001 to 1,000,000	57	18.94
Greater than Ksh 1,000,000	170	56.48
Age of firm		
0-3 years	56	18.60
4-10 years	84	27.91
11-20 years	83	27.57
21-30 years	40	13.29
31-40 years	26	8.64
41-50 years	12	3.99

VT OMNES VNVM SINT

Industry		
Service	238	79.07
Industrial	40	13.29
Agricultural/mining	7	2.33
Service and industrial	12	3.99
Service and agricultural/ mining	2	0.66
Industrial and agricultural	1	0.33
Service, industrial and agricultural	1	0.33
Mode of working		
Remote working	132	43.85
Physically working at the office	55	18.27
Hybrid of remote and physical	114	37.87
Ownership structure		
Family owned	70	23.26
Partnership	139	46.18
Sole Proprietorship	25	8.31
Cooperative	18	5.98
Private limited company	49	16.28
IT back up facilities in 2020		
Yes	70	23.26
No	231	76.74
Growth trajectory		
Growing rapidly	19	6.31
Growing slowly	33	10.96
Neither growing nor declining	131	43.52
Slowly declining	116	38.54

Rapidly declining	2	0.66
Profitability		
Unprofitable	16	5.32
Breaking even	42	13.95
Moderately profitable	159	52.82
Highly profitable	84	27.91
Severity of COVID-19		
We dealt with it as part of business as usual	9	2.99
It challenged us but we came out stronger than before	58	19.27
It challenged us but was not overly disruptive	61	20.27
It definitely challenged us and was moderately disruptive	65	21.59
It could have shut us down permanently	108	35.88
Previous shock experience		
Yes	55	18.27
No	246	81.73

Source: Primary data

4.2.3 Respondent's Profile Information

The participants in this study exhibited the following characteristics: 52.66% were male and 46.68% were female. The largest age group among respondents was those aged 35-39 years, comprising 26.08% of the total. In terms of education, a significant portion (43.85%) held a diploma. Most respondents occupied roles related to business continuity, accounting for 29.07%. The majority were in middle management positions, representing 34.22% of the sample. Additionally, 40.03% had between 6 to 10 years of experience in their respective sectors, while 39.37% had a similar tenure (6-10 years) within the SMEs they worked for.

Detailed demographic information is in Table 4.3.

Table 4.3: Respondent's Demographic Characteristics

Details	Frequency	%
Gender		
Male	317	52.66
Female	281	46.68
Did not choose	4	0.66
Age		
18-34	115	19.10
35-39	157	26.08
40-49	133	22.09
50-59	106	17.61
Above 60	91	15.12
Education level		
Postgraduate	22	3.65
Undergraduate	187	31.06
Diploma	264	43.85
Certificate	57	9.47
Other	72	11.96
Roles		
Risk Management	118	19.60
Crisis Management	30	4.98
Emergency Management	29	4.82
Business Continuity	175	29.07
Risk Management and Business Continuity	168	27.91
Risk Management and Crisis Management	11	1.83
Crisis Management and Emergency Management	32	5.32
Risk management, Emergency management and Business continuity	35	5.81

VT OMNES VNVM SINT

Other	4	0.66
Position within the firm		
Senior Management	125	20.76
Middle Management	206	34.22
Supervisor	103	17.11
Lower Level	168	27.91
Tenure in sector		
1-5 years	75	12.46
6-10 years	241	40.03
11-20 years	99	16.45
More than 20 years	187	31.06
Tenure in firm		
2-5 years	110	18.27
6-10 years	237	39.37
11-20 years	163	27.08
More than 20 years	92	15.28

Source: Primary data

4.2.4 Descriptive and Inferential Statistics

The predictor and dependent variables under study were all measured using a Likert scale and were averaged to form their overall measure. Control variables were analyzed as either categorical variables or continuous variables. Control variables such as sector, ownership structure, mode of working, previous shock experience and presence of IT backup facilities were measured as categorical variables and later translated into dummy variables to identify specific characteristics that were important controls for more specific meaning. Other control variables such as age of firm were measured as continuous variables hence the logarithm value was obtained for analysis.

The minimum, maximum, mean, standard deviation, skewness and standard error statistics for the study variables were calculated. Hair et al. (2010) argued that data is considered normal if skewness is between -2 to +2 hence all variables at this juncture were normally

distributed apart from the agricultural sector categorical variable. The overall descriptive statistics of all variables under study are shown in Table 4.4 below.

Table 4.4: Overall Descriptive Statistics

	N	Minimum	Maximum	Mean	Std. Deviation	Skewness	
	Statistic	Statistic	Statistic	Statistic	Statistic	Statistic	Std. Error
Monthly turnover	602	1	4	3.21	1.048	-1.001	0.1
Age of firm	602	2	7	3.77	1.346	0.565	0.1
Service sector dummy	602	0	1	0.79	0.407	-1.433	0.1
Industrial sector dummy	602	0	1	0.13	0.34	2.168	0.1
Agriculture sector dummy	602	0	1	0.02	0.151	6.342	0.1
Remote working mode dummy	602	0	1	0.44	0.497	0.248	0.1
Physically working mode dummy	602	0	1	0.18	0.387	1.646	0.1
Hybrid working mode dummy	602	0	1	0.38	0.485	0.501	0.1
Family-owned dummy	602	0	1	0.23	0.423	1.269	0.1
Partnership owned dummy	602	0	1	0.46	0.499	0.154	0.1

PLC owned dummy	602	0	1	0.16	0.369	1.831	0.1
IT backup facilities	602	0	1	0.77	0.423	-1.269	0.1
Growth trajectory	602	1	5	3.16	0.865	-0.846	0.1
Profitability	602	1	4	3.03	0.794	-0.699	0.1
Severity of COVID to org	602	1	5	2.37	1.25	0.318	0.1
Previous shock experience	602	0	1	0.18	0.387	1.646	0.1
Gender	602	1	3	1.48	0.513	0.228	0.1
Age of respondent	602	1	5	2.84	1.335	0.202	0.1
Education level	602	1	5	2.95	1.014	0.58	0.1
Role	602	1	9	4	1.986	0.079	0.1
Position within the firm	602	1	4	2.52	1.107	0.104	0.1
Tenure in sector	602	1	4	2.66	1.047	0.057	0.1
Tenure in firm	602	1	5	2.47	1.099	0.67	0.1
Size of firm	602	1	9	4.73	3.295	0.244	0.1
Transformational Leadership	602	1.4	4.55	3.0463	0.75478	-0.109	0.1
Directive Leadership	602	1.14	4.86	3.1804	0.9292	-0.226	0.1

Abusive supervision	602	1.2	5	2.5816	0.93312	0.582	0.1
Employees' psychological capital	602	1.41	4.64	2.9653	0.68076	0.13	0.1
Fear of COVID19	602	1.14	4.86	2.4718	0.79591	0.919	0.1
Organizational resilience	602	1.15	4.77	3.3536	0.87529	-0.552	0.1
Valid N (listwise)	602						

Source: Primary data

Further, the means, modes and standard deviations of each measurement item from the survey tools were computed.

The transformational leadership behavior that received the highest rating was individual consideration, with an overall mean of 3.185. This was followed by idealized influence, which had an overall mean of 3.094, then inspirational motivation with a mean of 3.018, and lastly intellectual stimulation, which had a mean of 2.835. The highest rated single items were from individualized consideration aspect where the statements '*my boss spends time teaching and coaching*' and '*my boss considers me as having different needs, abilities, and aspirations from others*' had the highest means (3.21). An item from intellectual stimulation aspect that stated that '*my boss suggests new ways of looking at how to complete assignments*' had the lowest mean (2.78). As per copyright instructions, only a few transformational leadership items are listed in the descriptive statistics as in Table 4.5a for the purpose of the final thesis.

Table 4.5a: Descriptive Statistics for transformational leadership

Transformational leadership. My boss:	N	Mean	Mode	Std. Deviation
Idealized influence				
1. Idealized 1	602	3.03	3	1.138
2. Idealized 2	602	3.14	3	1.142
3. Idealized 3	602	3.12	3	1.182
4. Idealized 4	602	3.08	3	1.185
5. Idealized 5	602	3.11	3	1.132
6. Idealized 6	602	3.10	3	1.180
7. Idealized 7	602	3.08	3	1.157
8. Idealized 8	602	3.10	3	1.129
Overall mean		3.094		
Inspirational Motivation				
9. Inspirational 1	602	3.00	3	1.267
10. Inspirational 2	602	3.00	3	1.251
11. Inspirational 3	602	3.02	4	1.292
12. Inspirational 4	602	3.05	4	1.264
Overall mean		3.018		
Intellectual stimulation				
13. Intellectual 1	602	2.84	3	1.162
14. Intellectual 2	602	2.86	3	1.161

15. Intellectual 3	602	2.86	2	1.168
16. Suggests new ways of looking at how to complete assignments	602	2.78	2	1.171
Overall mean		2.835		
Individualized consideration				
17. Spends time teaching and coaching	602	3.21	4	1.297
18. Individualized 2	602	3.19	4	1.258
19. Individualized 3	602	3.19	4	1.317
20. Individualized 4	602	3.15	4	1.331
Overall mean		3.185		

Source: Primary data

For directive leadership, the overall mean score is 3.1804. Among the SMEs studied, the statement, '*my boss makes most work-related decisions for me*' had the highest mean (mean of 3.24) while the statement, '*my boss has to lay out goals and guidelines, otherwise I will be passive and get nothing accomplished*' had the lowest mean (mean of 3.15). The statistics of all directive leadership items are displayed in Table 4.5b below.

Table 4.5b: Descriptive Statistics for directive leadership

Directive leadership. **My boss:**	**N**	**Mean**	**Mode**	**Std. Deviation**
1. Expects me to follow his/her instructions precisely	602	3.15	4	1.215
2. Motivates me by letting them know what will happen to me if my work is unsatisfactory	602	3.22	4	1.208

3. Requires me to submit detailed reports of my work activities	602	3.17	2	1.195
4. Makes most work-related decisions for me	602	3.24	3	1.189
5. Supervises me very closely	602	3.22	4	1.180
6. Has to lay out goals and guidelines, otherwise I will be passive and get nothing accomplished	602	3.15	3	1.170
7. Has to lay out goals and guidelines, otherwise I will be passive and get nothing accomplished	602	3.11	4	1.213

Source: Primary data

For abusive supervision, the highest means were on three statements, 'my boss ridicules me', '*my boss tells me my thoughts or feelings are stupid*' and '*my boss gives me the silent treatment*' all with a mean of 2.63. The lowest mean was on the statement, 'my boss tells me I'm incompetent' with a mean score of 2.54. The statistics of all abusive supervision items are displayed in Table 4.5c below.

Table 4.5c: Descriptive Statistics for Abusive Supervision

Abusive supervision. My boss:	**N**	**Mean**	**Mode**	**Std. Deviation**
1. Ridicules me	602	2.63	2	1.267
2. Tells me my thoughts or feelings are stupid	602	2.63	2	1.250
3. Gives me the silent treatment	602	2.63	2	1.273
4. Puts me down in front of others	602	2.57	2	1.237
5. Invades my privacy	602	2.55	2	1.262
6. Reminds me of my past mistakes and failures	602	2.56	2	1.231

7. Doesn't give me credit for jobs requiring a lot of effort	602	2.62	2	1.264
8. Blames me to save himself/herself embarrassment	602	2.61	2	1.213
9. Breaks promises he/she makes	602	2.56	2	1.216
10. Expresses anger at me when he/she is mad for another reason	602	2.61	2	1.186
11. Makes negative comments about me to others	602	2.55	2	1.254
12. Is rude to me	602	2.56	2	1.139
13. Does not allow me to interact with my coworkers	602	2.55	2	1.216
14. Tells me I'm incompetent	602	2.54	2	1.237
15. Lies to me	602	2.55	2	1.243

Source: Primary data

For employees' psychological capital, the aspect of optimism had the highest overall mean (3.20) while efficacy had the lowest overall mean (2.69). The highest rated item was from optimism aspect where the statement '*I can think of many ways to reach my current work goals*' had the highest mean (3.26) while an item from self-efficacy aspect that stated that '*I feel confident helping to set targets/goals in my work area'* had the lowest mean (2.66). The statistics of all psychological capital items are displayed below. As per copyright instructions, only a few psychological capital items are listed in the descriptive statistics in Table 4.5d for the purpose of this thesis.

VT OMNES UNUM SINT

Table 4.5d: Descriptive Statistics for Employees' psychological capital

Employees' psychological capital	N	Mean	Mode	Std. Deviation
Efficacy				
1. Efficacy 1	602	2.69	3	1.202
2. Efficacy 2	602	2.67	2	1.209
3. Efficacy 3	602	2.74	3	1.220
4. I feel confident helping to set targets/goals in my work area	602	2.66	2	1.221
5. Efficacy 5	602	2.68	3	1.177
6. Efficacy 6	602	2.70	2	1.169
Overall mean		2.69		
Optimism				
7. Optimism 1	602	3.22	3	1.124
8. Optimism 2	602	3.18	3	1.165
9. Optimism 3	602	3.18	3	1.132
10. Optimism 4	602	3.19	3	1.173
11. I can think of many ways to reach my current work goals	602	3.26	3	1.139
12. Optimism 6	602	3.18	3	1.158
13. Optimism 7	602	3.22	3	1.125
Overall mean		3.20		

Resilience				
14. Resilience 1	602	3.10	3	1.140
15. Resilience 2	602	3.12	3	1.178
16. Resilience 3	602	3.09	3	1.149
17. Resilience 4	602	3.12	3	1.178
18. Resilience 5	602	3.09	3	1.149
Overall mean		3.10		
Hope				
19. Hope 1	602	2.87	3	1.139
20. Hope 2	602	2.89	3	1.127
21. Hope 3	602	2.96	3	1.161
22. Hope 4	602	2.96	3	1.141
23. Hope 5	602	2.86	3	1.143
24. Hope 6	602	2.89	3	1.157
Overall mean		2.91		

Source: Primary data

The highest mean on fear of COVID-19 items was on the statement, '*my heart raced or palpitated when I thought about getting coronavirus-19*' while the lowest mean was on the statement, '*I could not sleep because I was worrying about getting coronavirus-19'*. The statistics of all fear of COVID-19 items are displayed in Table 4.5e.

Table 4.5e: Descriptive Statistics for fear of COVID-19

Fear of COVID-19	N	Mean	Mode	Std. Deviation
1. I was most afraid of coronavirus-19	602	2.46	2	1.073
2. It made me uncomfortable to think about coronavirus-19	602	2.48	2	1.122
3. My hands become clammy when I thought about coronavirus-19	602	2.47	2	1.116
4. I was afraid of losing my life because of coronavirus-19	602	2.46	2	1.081
5. When watching news and stories about coronavirus-19 on social media, I became nervous or anxious	602	2.50	3	1.019
6. I could not sleep because I was worrying about getting coronavirus-19	602	2.49	2	1.060
7. My heart raced or palpitated when I thought about getting coronavirus-19	602	2.45	2	1.067

Source: Primary data

For organizational resilience, the highest mean was on the statement, '*managers actively listened for problems*' (mean of 3.57) while the lowest mean was on the statement '*we believed emergency plans must be practiced and tested to be effective*' (mean of 3.03). The statistics of all organizational resilience items are displayed in Table 4.5f.

Table 4.5f: Descriptive Statistics for Organizational Resilience

	N	Mean	Mode	Std. Deviation
1. We were mindful of how a crisis could affect us	602	3.09	4	1.317
2. We believed emergency plans must be practiced and tested to be effective	602	3.03	3	1.269
3. We were able to shift rapidly from business-as-usual to respond to crises	602	3.08	4	1.290
4. We build relationships with organizations we might have had to work with in a crisis	602	3.11	4	1.295
5. Our priorities for recovery would provide direction for staff in a crisis	602	3.10	4	1.296
6. There was a sense of teamwork and camaraderie in our organization	602	3.51	4	1.161
7. Our organization maintained sufficient resources to absorb some unexpected change	602	3.53	4	1.154
8. People in our organization ‘‘owned’’ a problem until it was resolved	602	3.49	4	1.203
9. Staff had the information and knowledge they needed to respond to unexpected problems	602	3.49	4	1.206
10. Managers in our organization led by example	602	3.52	4	1.231
11. Staff were rewarded for ‘‘thinking outside the box’’	602	3.55	4	1.216
12. Our organization could make tough decisions quickly	602	3.54	4	1.174

13. Managers actively listened for problems	602	3.57	4	1.243

Source: Primary data

The next step in the data analysis was correlation analysis.

4.2.5 Correlation Analysis

Bivariate correlation analysis was used to determine if variables were related and the strength of any relationships. Data for this present study was predominantly measured using Likert-type scales. This was ordinal data and hence spearman's rho (p) was used to test whether variables were related. Spearman's rho values lie between -1 and 1 and the closer the coefficient is to zero the weaker the association between the variables (Cooper & Schindler, 2014). The correlation analyses table is shown in Table 4.6.

VT OMNES VNVM SINT

Table 4.6: Correlations Table

			TL	DL	AS	PSY	CVDF	OGR
Spearman's rho	**TL**	Correlation Coefficient	1.000					
		Sig. (2-tailed)						
		N	602					
	DL	Correlation Coefficient	.638**					
		Sig. (2-tailed)	.000					
		N	602	602				
	AS	Correlation Coefficient	-.629**	-.526**				
		Sig. (2-tailed)	.000	.000				
		N	602	602	602			
	PSY	Correlation Coefficient	.743**	.678**	-.618**			
		Sig. (2-tailed)	.000	.000	.000			
		N	602	602	602	602		
	CVDF	Correlation Coefficient	-.548**	-.523**	.523**	-.572**		
		Sig. (2-tailed)	.000	.000	.000	.000		
		N	602	602	602	602	602	
	OGR	Correlation Coefficient	.711**	.659**	-.630**	.688**	-.551**	
		Sig. (2-tailed)	.000	.000	.000	.000	.000	
		N	602	602	602	602	602	602

Source: Primary data

There was a positive and significant relationship between the dependent variable, which is organizational resilience and three predictors including transformational leadership, directive leadership and psychological capital. There was a significant and negative relationship between organizational resilience and two predictors namely, fear of COVID-19 and abusive supervision.

4.3 Multilevel Modelling

Multilevel data violates the assumption of independent observations hence regression analysis using ordinary least squares is not appropriate as compared to mixed effects modelling which accounts for non-independence of observations (Lee et al., 2018; Pornprasertmanit et al., 2014). This present study contains employees nested within SMEs, which represents multilevel data. This study's main objective also presents a micro-macro model with predictors at level one and the outcome at level two which also requires multilevel analysis to control for covariates at the level of individuals (Dijkstra et al., 2019). The first step in multilevel modelling was determining intra-class correlation (ICC) which computes level two variance over total variance (Lee et al., 2018). The second step involved estimating the measurement model to check for model fit and the final step involved estimating the structural models to test hypothesized relationships. These are outlined below.

4.3.1 Intra-class Correlation

Stata version 17 was used to estimate the null and random intercept model from which the intra-class correlation (ICC) was drawn. The intra-class correlation for this study was .024 which is less than .05 hence does not indicate significant clustering (Koo & Li, 2016). See Table 4.7 below.

Table 4.7: Intra-class Correlation

Level	ICC	Std err.	[95% conf. interval]	
Firm	0.024	0.058	0.000	0.767

Source: Primary data

4.3.2 Quality of the Measurement Model

Multilevel confirmatory factor analysis (MLCFA) was conducted using to verify the relationship between latent variables and their indicators but because of the low ICC, the analysis did not converge. Previous studies show that with a low ICC, MLCFA may not converge and a single level CFA is appropriate in such a case (Pornprasertmanit et al., 2014; Ryu & West, 2009).

The quality of the measurement model for the study was tested by conducting CFA using partial least squares structural equation modelling (PLS SEM) using Smart PLS4 software. PLS SEM is usually appropriate for smaller samples (Hair et al., 2019). Quality of the measurement model was ascertained using the following tests, internal consistency reliability, indicator reliability, convergent validity, and discriminant validity, which were done at the sub-dimensional levels for second order constructs although subsequent analysis was done with all constructs averaged to one score. The results of the mentioned tests are displayed in table 4.8 below.

Table 4.8: Quality of the Measurement Model

	Cronbach's alpha	**CR (rho_a)**	**CR (rho_c)**	**(AVE)**
1. Abusive Supervision	0.947	0.947	0.953	0.573
2. Fear of COVID-19	0.861	0.874	0.894	0.545
3. Directive Leadership	0.891	0.891	0.914	0.604
4. Organizational Resilience-Adaptive capacity	0.910	0.911	0.927	0.615
5. Organizational Resilience-Planning capacity	0.890	0.89	0.919	0.694
6. Psychological Capital -Efficacy	0.869	0.869	0.902	0.605
7. Psychological Capital -Hope	0.871	0.872	0.903	0.608
8. Psychological Capital -Optimism	0.891	0.891	0.914	0.604
9. Psychological capital -Resilience	0.786	0.788	0.875	0.650
10. Transformational -Idealized Influence	0.891	0.891	0.913	0.567

11. Transformational -Individual consideration	0.841	0.842	0.893	0.677
12. Transformational - Inspirational motivation	0.831	0.832	0.888	0.664
13. Transformational - Intellectual stimulation	0.835	0.836	0.890	0.669

Source: Primary data

Each of the measurement model's test result is discussed below.

Internal Reliability

The Cronbach alpha values for this study ranged from 0.831 to 0.947. The CR of each construct ranged from 0.832 to 0.947. The two test hence prove that there was satisfactory internal reliability with all values being greater than 0.70 (Hair et al., 2011).

Convergent Validity

The AVE of each variable in the present study ranged from 0.545 to 0.700, hence satisfactory since this is greater than 0.50 (Fornell & Larcker, 1981).

Discriminant Validity

In this present study, square root of AVE for each construct is shown in the figures in bold and is greater than its correlation with other constructs hence discriminant validity is ascertained from the Fornel and Lacker criteria (Fornell & Larcker, 1981). The indicators of constructs also exhibit a HTMT value that is smaller than one (Henseler et al., 2015) hence proof of discriminant validity. Fornel and Lacker criteria as well as HTMT ratio criterion for this present study are displayed in Table 4.9 below.

Table 4.9: Fornel and Lacker Discriminant validity

	AS	FCVD	DL	ADPC	PLN	PSYEFF	PSYHOP	PSYOPT	PSYRES	TLIDINF	TLINDCON	TLINSMOT	TLINTSTL
AS	**0.757**												
FCVD	-0.525	**0.738**											
DL	-0.528	-0.523	**0.777**										
ADPC	-0.557	-0.503	0.542	**0.784**									
PLNC	-0.557	-0.463	0.637	0.544	**0.833**								
PSY-EFF	-0.484	-0.476	0.522	0.44	0.457	**0.778**							
PSY-HOP	-0.442	-0.385	0.491	0.37	0.466	0.402	**0.78**						
PSY-OPT	-0.471	-0.452	0.52	0.479	0.534	0.419	0.395	**0.777**					
PSY-RES	-0.429	-0.367	0.462	0.407	0.447	0.348	0.36	0.421	**0.837**				
TL-IDINF	-0.504	-0.447	0.468	0.45	0.501	0.421	0.368	0.443	0.375	**0.753**			
TL-INDCON	-0.512	-0.387	0.528	0.448	0.616	0.425	0.417	0.468	0.434	0.434	**0.823**		
TL-INSMOT	-0.471	-0.419	0.488	0.442	0.525	0.438	0.37	0.48	0.457	0.479	0.495	**0.815**	
TL-INTSTL	-0.492	-0.470	0.556	0.489	0.575	0.473	0.454	0.505	0.443	0.504	0.504	0.494	**0.818**

VT OMNES VNVM SINT

Source: Primary data

Abbreviations: AS is abusive supervision, FCVD is fear of COVID-19, DL is directive leadership, ADPC & PLNC are organizational resilience components of adaptive capacity and planning capacity respectively; PSY-EFF, PSY-HOP, PSY-OPT & PSY-RES are psychological capital components of efficacy, hope, optimism and resilience respectively; TL-INDINF,TL-INDCON, TL- INSMOT & TL-INTSTL are transformational leaderships components of idealized influence, individual consideration, inspirational motivation and intellectual stimulation respectively.

Indicator Reliability

All items in the measurement model exhibited loadings exceeding 0.5 (Hair et al., 2010), ranging from 0.586 to 0.885. All items are significant at the level of 0.001. Table 4.10 below shows the loading for each item.

Table 4.10: Outer Loadings and Indicator Multi-collinearity

Factors	Items	Factor Loadings	VIF
1. Abusive Supervision	AS1	0.761	2.114
	AS10	0.754	2.136
	AS11	0.762	2.159
	AS12	0.737	1.968
	AS13	0.781	2.294
	AS14	0.768	2.204
	AS15	0.763	2.143
	AS2	0.756	2.119
	AS3	0.752	2.134
	AS4	0.753	2.121
	AS5	0.749	2.089
	AS6	0.768	2.193
	AS7	0.760	2.156
	AS8	0.737	1.986
	AS9	0.751	2.042
2. Fear of COVID-19	CVDFEAR1	0.752	1.743
	CVDFEAR2	0.739	1.682
	CVDFEAR3	0.737	1.640
	CVDFEAR4	0.761	1.783
	CVDFEAR5	0.738	1.642
	CVDFEAR6	0.729	1.699
	CVDFEAR7	0.711	1.592
3. Directive Leadership	DL1	0.790	2.035

	DL2	0.799	2.059
	DL3	0.781	1.910
	DL4	0.780	1.908
	DL5	0.765	1.831
	DL6	0.756	1.791
	DL7	0.769	1.864
4. Organizational resilience-Adaptive capacity	OR-ADPC1	0.793	2.098
	OR-ADPC2	0.775	2.009
	OR-ADPC3	0.799	2.272
	OR-ADPC4	0.797	2.243
	OR-ADPC5	0.785	2.047
	OR-ADPC6	0.786	2.092
	OR-ADPC7	0.778	2.016
	OR-ADPC8	0.761	1.945
5. Organizational resilience - Planning capacity	OR-PLN1	0.857	2.425
	OR-PLN2	0.831	2.151
	OR-PLN3	0.816	2.050
	OR-PLN4	0.825	2.219
	OR-PLN5	0.836	2.198
6. Psychological capital-Self efficacy	PSY-EFF1	0.759	1.718
	PSY-EFF2	0.783	1.909
	PSY-EFF3	0.784	1.908
	PSY-EFF4	0.789	1.892
	PSY-EFF5	0.786	1.901
	PSY-EFF6	0.763	1.811

7. Psychological capital - Hope	PSY-HOP1	0.802	2.043
	PSY-HOP2	0.772	1.817
	PSY-HOP3	0.787	1.854
	PSY-HOP4	0.751	1.699
	PSY-HOP5	0.780	1.896
	PSY-HOP6	0.785	1.857
8. Psychological capital- Optimism	PSY-OPT1	0.760	1.801
	PSY-OPT2	0.796	2.071
	PSY-OPT3	0.776	1.965
	PSY-OPT4	0.794	2.101
	PSY-OPT5	0.769	1.883
	PSY-OPT6	0.773	1.879
	PSY-OPT7	0.771	1.923
9. Psychological capital- Resilience	PSY-RES1	0.821	1.602
	PSY-RES2	0.863	1.894
	PSY-RES3	0.825	1.596
10. Transformational leadership-Idealized influence	TL-IDINF1	0.761	1.943
	TL-IDINF2	0.764	1.943
	TL-IDINF3	0.743	1.803
	TL-IDINF4	0.742	1.853
	TL-IDINF5	0.759	1.849
	TL-IDINF6	0.752	1.801
	TL-IDINF7	0.748	1.799
	TL-IDINF8	0.757	1.888

VT OMNES VNVM SINT

11. Transformational leadership-Individual consideration	TL-INDCON1	0.830	1.864
	TL-INDCON2	0.817	1.905
	TL-INDCON3	0.822	1.920
	TL-INDCON4	0.822	1.783
12. Transformational leadership- Inspirational motivation	TL-INSMOT1	0.810	1.757
	TL-INSMOT2	0.815	1.892
	TL-INSMOT3	0.816	1.878
	TL-INSMOT4	0.818	1.899
13. Transformational leadership-Intellectual stimulation	TL-INTSTL1	0.832	2.001
	TL-INTSTL2	0.808	1.780
	TL-INTSTL3	0.824	1.821
	TL-INTSTL4	0.808	1.858

Source: Primary data

From the above table, the indicators represent their underlying construct well. Multi-collinearity was also not a problem for the indicators since the value of variance inflation factors (VIF) were below 5 (Hair et al., 2011).

4.3.3 Quality of the Structural Model

In order to ascertain the overall multi-level model, fit statistics including chi-square and standardized root mean squared residual (SRMR) were assessed. The exact fit was assessed using chi square test, which should not be significant otherwise approximate fit is tenable if SRMR is less than or equal to 0.08 (Asparouhov & Muth´en, 2018) and absolute standardized residual correlations are less than 0.10 (Kline, 2015). In this case, the approximate fit was defensible since the SRMR was 0.056 which is less than 0.08 and absolute standardized residual correlations were less than 0.10. The root mean square error

of approximation (RMSEA) was assessed and was below the threshold of .06 hence fit. RMSEA for this model is 0.050, hence the structural model is fit.

The next part was to test the hypothesis for the study. Despite low degree of clustering (ICC of 2.4%) it was still important to cater for multilevel models (Ryu & West, 2009). Multilevel models were estimated using generalized structural equation modelling (GSEM) technique on Stata 17 software. GSEM caters adequately for multilevel data integration by default using mean–variance adaptive Gauss–Hermite quadrature (Stata, 2022). Each test of the hypotheses is discussed below.

4.4 Leadership Styles and Organizational Resilience

The structural model on the simultaneous relationship between transformational leadership, directive leadership and abusive supervision on organizational resilience was estimated using a multilevel model. The study controlled for size of SME, age of SME, sector of SME, previous shock experience, presence of IT backup facilities during COVID-19 period, mode of working and ownership structure. The results of this structural model are shown in Figure 4.1 below.

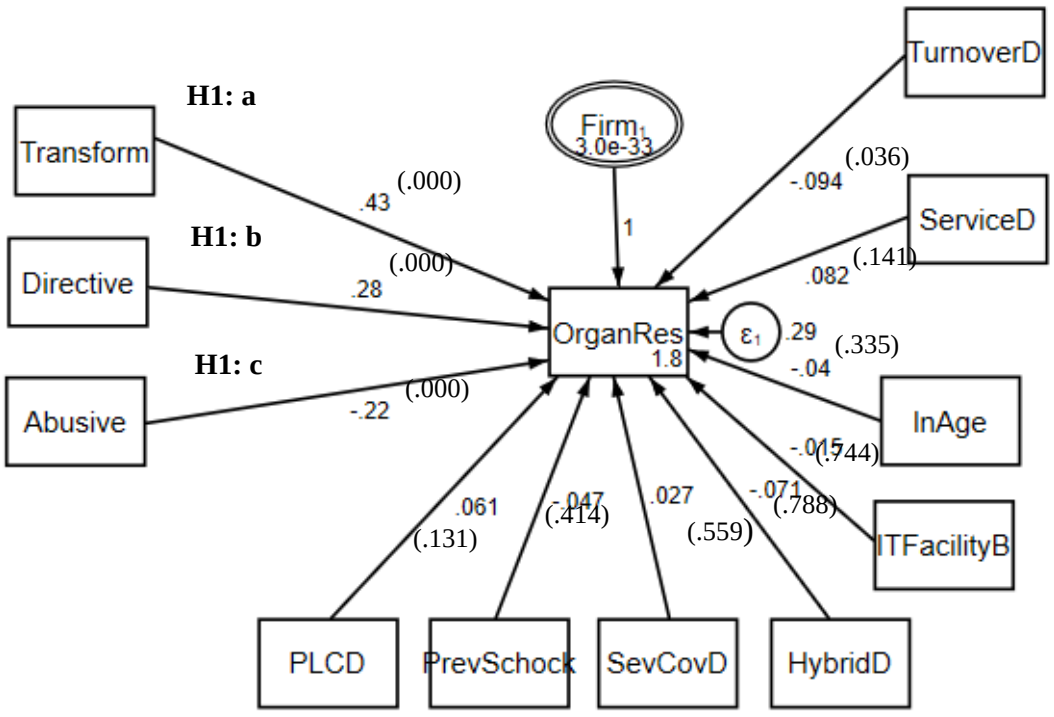

Figure 4.1: Hypothesis 1 Path Diagram

The relationship between transformational leadership and organizational resilience revealed a significant positive effect, $p < .0001$, $R^2 = 0.43$. Similarly, the relationship between directive leadership and organizational resilience revealed a significant positive effect $p < .0001$, $R^2 = 0.28$. The relationship between abusive supervision and organizational resilience however revealed a significant negative effect, $p < .0001$, $R^2 = -0.22$.

The control variables were analyzed using dummy variables for categorical variables and logarithms for continuous variables. The monthly turnover dummy variable was a significant control $p < .036$, $R^2 = -0.094$. This dummy variable represents a monthly turnover of Ksh 1million. The rest of the control variables including age of firm, previous shock experience, IT back up facilities and ownership structure as denoted by PLC dummy and severity of COVID-19 were not significant for this model.

The path coefficients are shown in Table 4.11 below.

Table 4.11: Hypothesis 1 Path Coefficients

	Coefficient	**Standard error**	**Z statistics**	**P values**
TL ⟶ OGR	0.432	0.043	10.07	0.000
DL ⟶ OGR	0.278	0.032	8.730	0.000
AS ⟶ OGR	-0.223	0.031	-7.130	0.000
TurnoverD ⟶OGR	-0.094	0.045	-2.090	0.036
ServiceD ⟶OGR	0.082	0.055	1.470	0.141
SevCovD ⟶ OGR	0.027	0.047	0.580	0.559
lnAge⟶ OGR	0.040	0.063	-0.630	0.335
PLCD ⟶ OGR	0.061	0.064	0.960	0.131
HybridD ⟶ OGR	-0.071	0.047	-1.510	0.788
ITFacilityB ⟶ OGR	-0.015	0.057	-0.270	0.744
PrevShock ⟶ OGR	-0.047	0.057	-0.820	0.414

Source: Primary data

VT OMNES VNVM SINT

In this model, transformational leadership explained 43.2% of the variance in organizational resilience; directive leadership explained 27.8% of the variance while abusive supervision explained -22.3% of the variance in organizational resilience. All the hypotheses were therefore supported.

H1 (a): Transformational leadership is positively associated with organizational resilience.

H1 (b): Directive leadership is positively associated with organizational resilience.

H1 (c): Abusive supervision is negatively associated with organizational resilience.

4.5 Leadership Styles and Employee Psychological Capital

The structural model on the simultaneous relationship between transformational leadership, directive leadership and abusive supervision on employees' psychological capital was run using MLSEM methods. The results for the structural model for this hypothesis are shown in Figure 4.2 below.

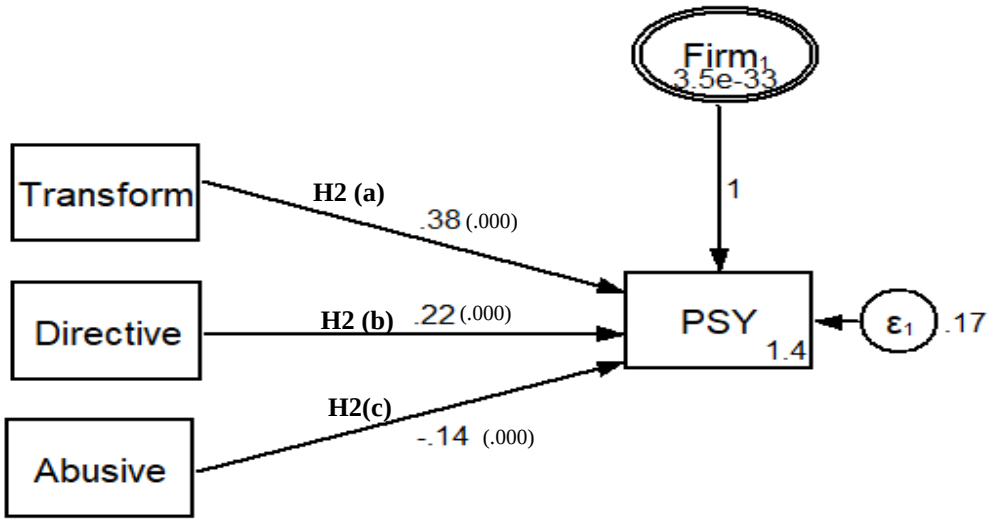

Figure 4.2: Hypothesis 2 Path Diagram

The relationship between transformational leadership and employee psychological capital revealed a significant positive effect of the model, $p < .0001$, $R^2 = 0.381$. Similarly, the

relationship between directive leadership and employee psychological capital was significant and positive $p < .0001$, $R^2 = 0.225$. on the other hand, the relationship between abusive supervision and employee psychological capital revealed a significant negative effect, $p < .0001$, $R^2 = -0.138$. The coefficients for these hypotheses are shown in Table 4.12 below.

Table 4.12: Hypothesis 2 Path Coefficients

	Coefficient	Standard error	Z statistics	P values
TL ⟶ PSY	0.381	0.032	11.82	0.000
DL ⟶ PSY	0.225	0.024	9.370	0.000
AS ⟶ PSY	-0.138	0.024	-5.820	0.000

Source: Primary data

In this model, transformational leadership explained 38.1% of the variance in employees' psychological capital, directive leadership explained 22.5% and abusive supervision explained -13.8% of the variance in employees' psychological capital. The hypotheses for this research objective were therefore all supported:

H2 (a): Transformational leadership is positively associated with employee psychological capital.

H2 (b): Directive leadership is positively associated with employee psychological capital.

H2 (c): Abusive supervision is negatively associated with employee psychological capital.

4.6 Employees' Psychological Capital and Organizational Resilience

The structural model on the relationship between employees' psychological capital and organizational resilience was run using MLSEM methods. The results of the structural model for this relationship are shown in Figure 4.3 below.

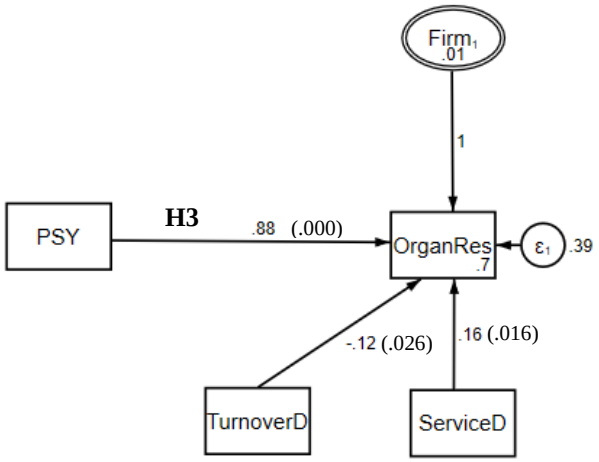

Figure 4.3: Hypothesis 3 Path Diagram

A significant positive relationship between employees' psychological capital and organizational resilience was revealed, $p < .0001$, $R^2 = 0.88$. The control variables that were significant were the service sector dummy $p < .016$, $R^2 = 0.16$ and monthly turnover $p < .026$, $R^2 = - 0.117$.

The coefficients for this hypothesis are shown in Table 4.13 below:

Table 4.13: Hypothesis 3 Path Diagram

	Coefficient	**Standard error**	**Z statistics**	**P values**
PSY ⟶ OGR	0.877	0.037	23.12	0.000
TurnoverD ⟶OGR	-0.117	0.053	-2.23	0.026
ServiceD ⟶OGR	0.155	0.064	2.420	0.016

Source: Primary data

Employee psychological capital explained 88% of the variance in organizational resilience. The hypothesis for this objective was therefore supported,

H3: Employee psychological capital is positively associated with organizational resilience.

4.7 Moderating Role of the Fear of COVID-19 on the Relationship Between Leadership Style and Employees' Psychological Capital

The structural model of the relationship between each leadership style namely transformational leadership, directive leadership, abusive supervision and employees' psychological capital, moderated by fear of COVID-19 was run using MLSEM.

4.7.1 Transformational Leadership and Employees' Psychological Capital Moderated by Fear of COVID-19

The results for the structural model of the moderation relationship are shown in Figure 4.4 below.

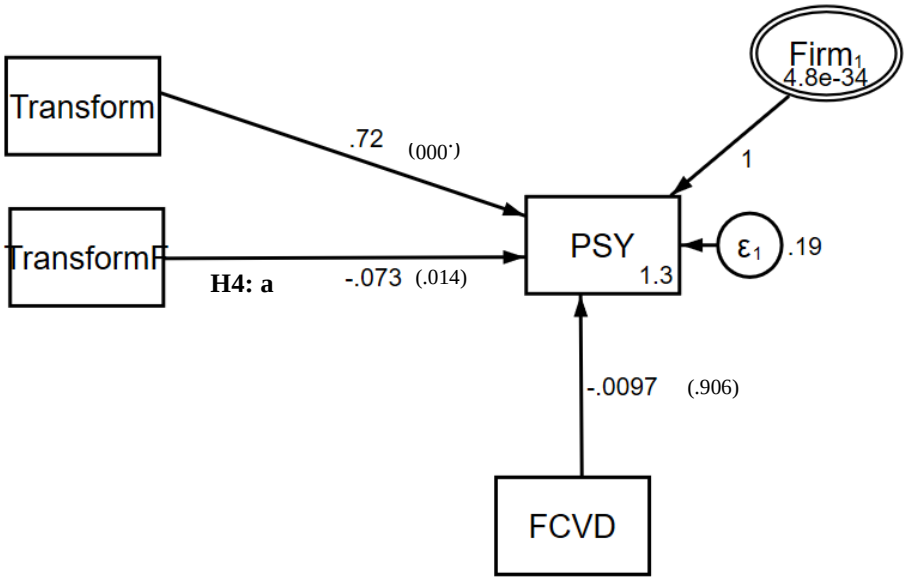

Figure 4.4: Hypothesis 4a Path Diagram

Abbreviations: FCVD represents fear of COVID-19, TransformF represents the interaction function of transformational leadership and fear of COVID-19, PSY represents psychological capital.

The interaction between transformational leadership and fear of COVID-19 on employees' psychological capital was negative and significant $p < .014$, $R^2 = -0.07$. The relationship between transformational leadership and employees' psychological capital was positive and significant, $p < .000$, $R^2 = 0.72$. The relationship between fear of COVID-19 and psycological capital was negative and not significant $p < .906$, $R^2 = -0.01$.

The coefficients for these hypotheses are shown in Table 4.14 below:

Table 4.14: Hypothesis 4a Path Coefficients

	Coefficient	**Standard error**	**Z statistics**	**P values**
TransformF ⟶PSY	-0.073	0.030	-2.46	0.014
TL ⟶ PSY	0.723	0.075	9.64	0.000
FCVD ⟶PSY	-0.010	0.082	-0.12	0.906

Source: Primary data

The results reveal that fear of COVID-19 moderated the negative relationship between transformational leadership and employees' psychological capital such that the association is stronger when fear of COVID is low versus high. The moderation slopes for low, medium and high fear of COVID are shown below in Figure 4.5:

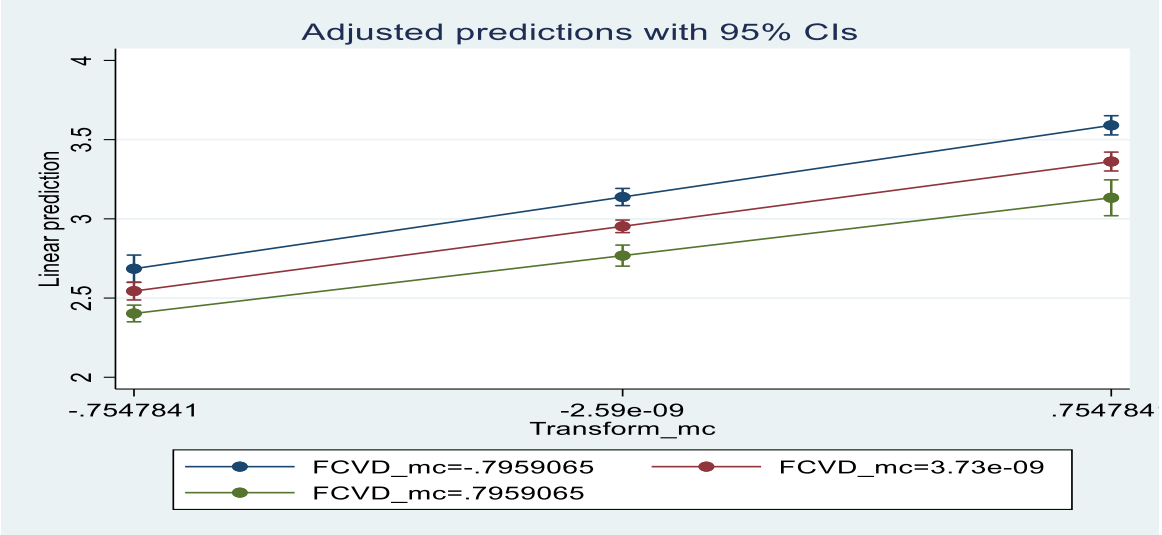

Figure 4.5: Transformational Leadership Moderation Graph

In the graph above, the y axis represents psychological capital while the x axis represents transformational leadership. The bottom green line represents the slope for high fear of COVID-19 (M+1 SD), the middle red represents medium fear of COVID-19 (M) and the top blue line represents low fear of COVID-19 (M-1 SD).

4.7.2 Directive Leadership and Employees' Psychological Capital Moderated by Fear of COVID-19

The results of the structural model for the moderation effect of fear of COVID-19 on directive leadership are shown in Figure 4.6 below.

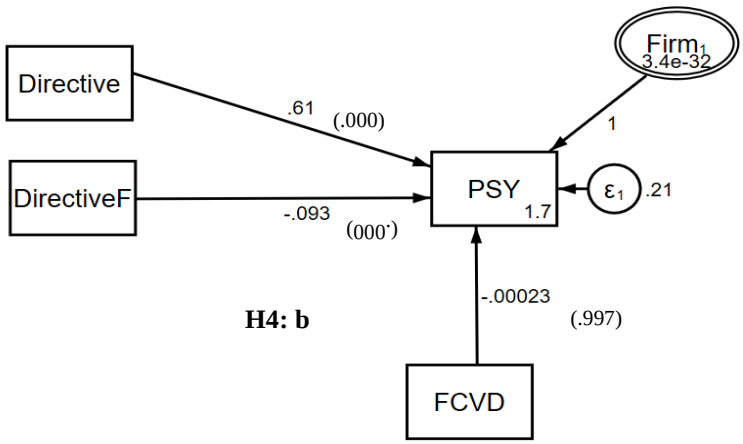

Figure 4.6: Hypothesis 4b Path Diagram

Abbreviations: FCVD represents fear of COVID-19, DirectiveF represents the interaction function of directive leadership and fear of COVID-19, PSY represents psychological capital.

The results revealed that the interaction between directive leadership and fear of COVID-19 on employees' psychological capital was negative and significant $p < .0001$, $R^2 = -0.093$. The relationship between directive leadership and employees' psychological capital was positive and significant, $p < .000$, $R^2 = 0.61$. The relationship between fear of COVID-19 and psycological capital was negative and not significant $p < .997$, $R^2 = -0.00$.

The coefficients are shown in Table 4.15 below:

Table 4.15: Hypothesis 4b Path Coefficients

	Coefficient	Standard error	Z statistics	P values
DirectiveF ⟶PSY	-0.093	0.024	-3.89	0.000
DL ⟶ PSY	0.609	0.063	9.64	0.000
FCVD ⟶PSY	-0.000	0.071	-0.00	0.997

Source: Primary data

This finding reveals that fear of COVID-19 moderated the negative relationship between directive leadership and employees' psychological capital such that the association is stronger when fear of COVID is low versus high. This is displayed in the moderation graph below.

The moderation slopes for low, medium and high fear of COVID-19 are shown in Figure 4.7 below.

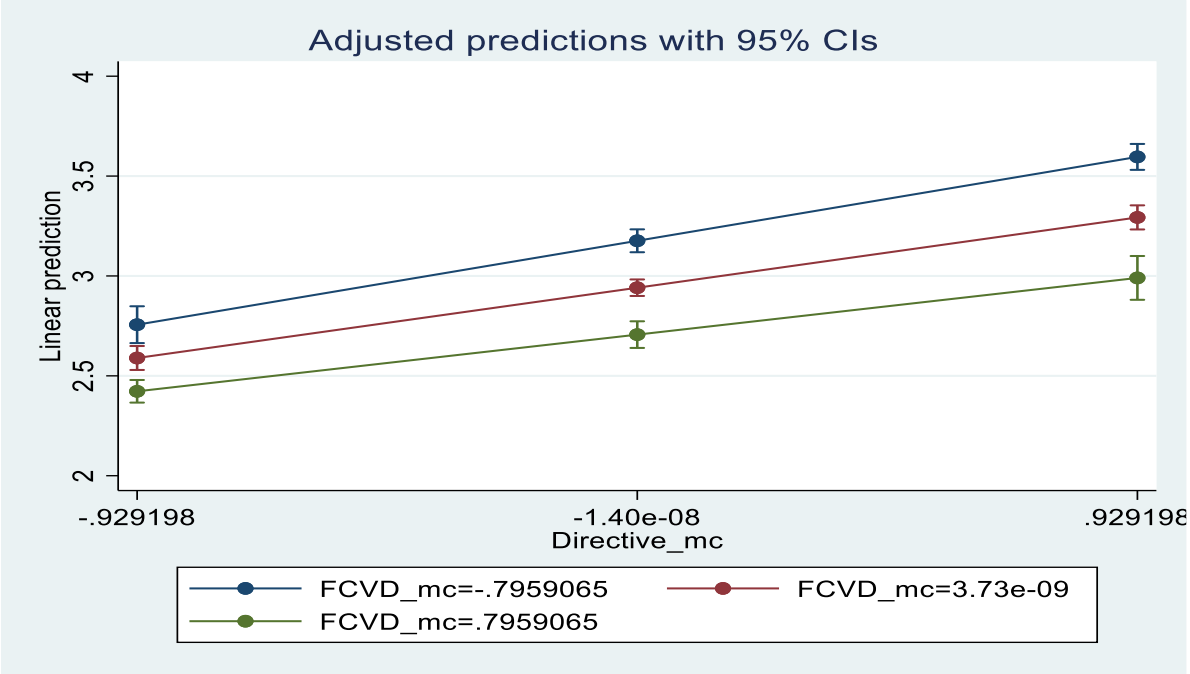

Figure 4.7: Directive Leadership Moderation Graph

In the graph above the y axis represents psychological capital while the x axis represents directive leadership. The bottom green line represents the slope for high fear of COVID-19, the middle red represents medium fear of COVID-19 and the top blue line represents low fear of COVID-19.

4.7.3 Abusive Supervision and Employees' Psychological Capital Moderated by Fear of COVID-19

The results of the structural model for the moderation effect of fear of COVID-19 on abusive supervision are shown in Figure 4.8 below.

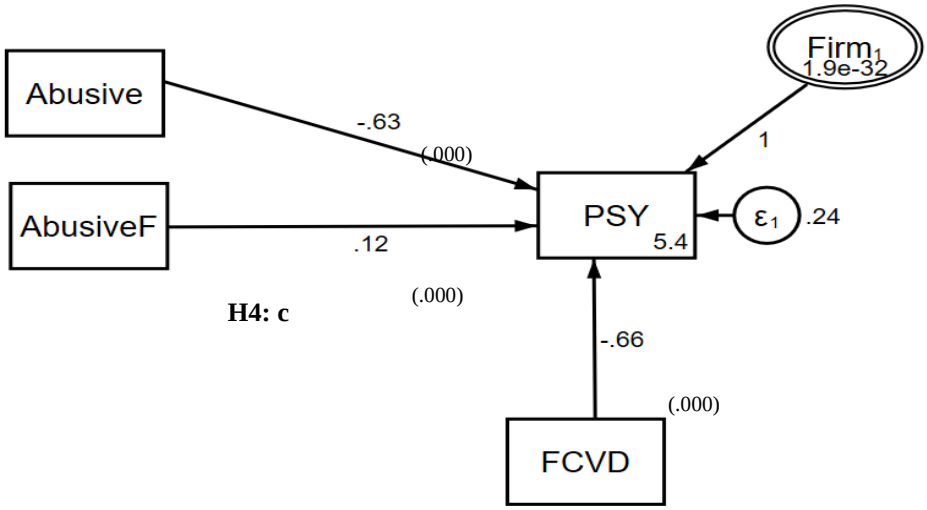

Figure 4.8: Hypothesis 4c Path Diagram

Abbreviations: FCVD represents fear of COVID-19, AbusiveF represents the interaction function of abusive supervision and fear of COVID-19, PSY represents psychological capital.

The results reveal that the interaction between abusive supervision and fear of COVID 19 on employees' psychological capital was positive and significant $p < .0001$, $R^2 = 0.121$. The relationship between abusive supervision and employees' psychological capital was negative and significant, $p < .000$, $R^2 = 0.63$. The relationship between fear of COVID-19 and psycological capital was negative and significant $p < .000$, $R^2 = -0.66$.

The coefficients are shown in Table 4.16 below:

Table 4.16: Hypothesis 4C Path Coefficients

	Coefficient	Standard error	Z statistics	P values
AbusiveF ⟶PSY	0.121	0.026	4.69	0.000
AS ⟶ PSY	-0.633	0.071	-8.86	0.000
FCVD ⟶PSY	-0.658	0.083	-7.90	0.000

Source: Primary data

These findings reveal that fear of COVID-19 moderates the relationship between abusive supervision and employees' psychological capital such that the association is stronger when fear of COVID is low versus high.

The moderation slopes for low, medium and high fear of COVID are shown below in Figure 4.8.

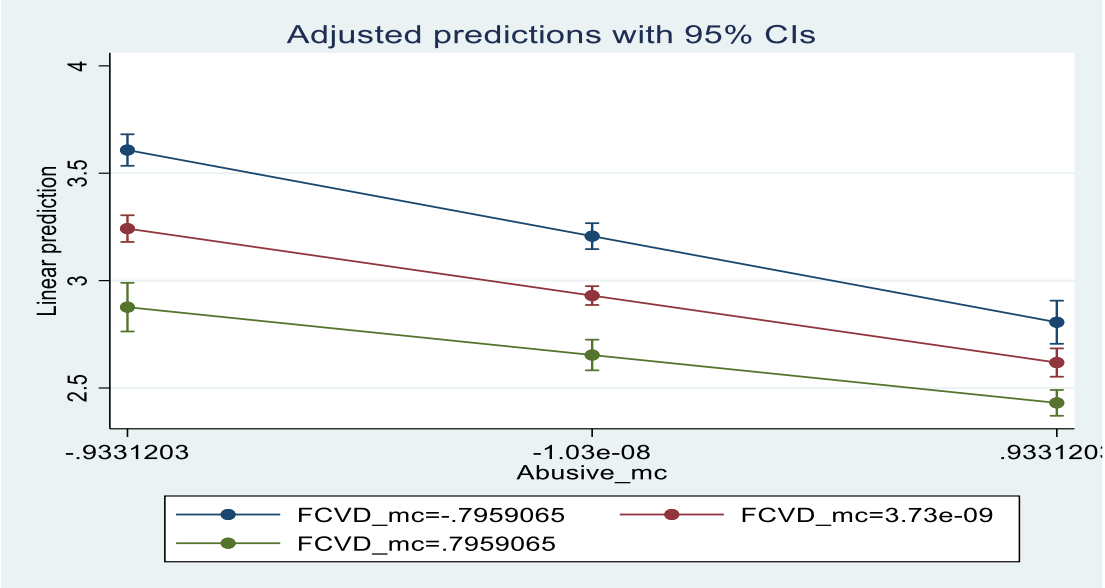

Figure 4.8: Abusive Supervision Moderation Graph

In the graph above, the y axis represents psychological capital while the x axis represents abusive supervision. The bottom green line represents the slope for high fear of COVID-

19, the middle red represents medium fear of COVID-19 and the top blue line represents low fear of COVID-19.

For the three leadership styles, the interaction of transformational leadership and fear of COVID-19 explained -7.3% of the variation in employees' psychological capital, interaction of directive leadership and fear of COVID-19 explained -9.3% of the variation in employees' psychological capital while the interaction with abusive supervision explained 12.1% of the variation in employees' psychological capital.

The three hypotheses for this objective were partially supported.

H4 (a): COVID-19 fear moderates the positive relationship between transformational leadership and employee psychological capital such that the association is stronger when fear of COVID is low versus high.

H4 (b): COVID-19 fear moderates the positive relationship between directive leadership and employee psychological capital such that the association is stronger when fear of COVID is low versus high.

H4(c): COVID-19 fear moderates the negative relationship between abusive supervision and employee psychological capital such that the association is stronger when fear of COVID is low versus high.

4.8 Mediating Role of Employees' Psychological Capital on the Relationship Between Leadership Styles and Organizational Resilience

The structural model on the relationship between each leadership style namely transformational leadership, directive leadership and abusive supervision on organizational resilience mediated by employees' psychological capital was estimated using MLSEM methods.

4.8.1 Mediating Role of Employees' Psychological Capital on the Relationship Between Transformational Leadership and Organizational Resilience

The results of the structural model for this relationship are shown in Figure 4.9.

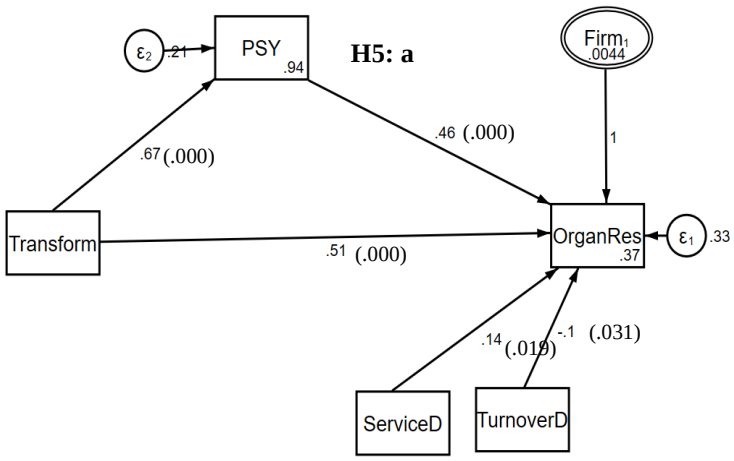

Figure 4.9: Hypothesis 5a Path Diagram

The mediating role of employees' psychological capital on the relationship between transformational leadership and organizational resilience is positive and significant $p < .0001$, $R^2 = 0.46$. The control variables that are significant are the service sector dummy $p < .019$, $R^2 = .14$ and monthly turnover $p < .031$, $R^2 = -.10$. The coefficients for these relationships are shown in Table 4.17 below.

Table 4.17: Hypothesis 5a Path Coefficients

	Coefficient	Standard error	Z statistics	P values
PSY⟶OGR	0.461	0.052	8.94	0.000
TL ⟶ OGR	0.511	0.046	11.03	0.000
TurnoverD ⟶OGR	-0.103	0.048	-2.16	0.031
ServiceD ⟶OGR	0.136	0.058	2.34	0.019
TL ⟶ PSY	0.668	0.025	27.21	0.000

Source: Primary data

4.8.2 Mediating Role of Employee Psychological Capital on the Relationship Between Directive Leadership and Organizational Resilience

The results from the structural model for this relationship are shown in Figure 4.10 below.

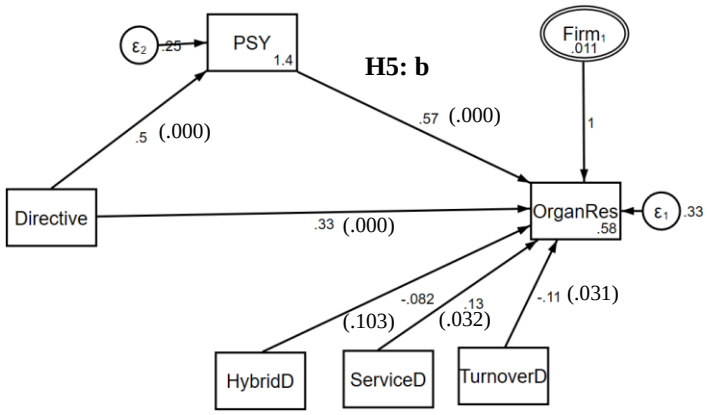

Figure 4.10: Hypothesis 5b Path Diagram

The mediating role of employee psychological capital on the relationship between directive leadership and organizational resilience was positive and significant $p < .0001$, $R^2 = 0.57$. The control variables that were significant included the service sector dummy variable $p < .032$, $R^2 = 0.13$, monthly turnover $p < 0.031$, $R^2 = -0.11$ and hybrid mode of working dummy variable $p < 0.103$, $R^2 = -0.08$. The coefficients are shown in Table 4.18.

Table 4.18: Hypothesis 5b Path Coefficients

	Coefficient	Standard error	Z statistics	P values
PSY⟶OGR	0.570	0.048	11.86	0.000
DL ⟶ OGR	0.335	0.035	9.54	0.000
TurnoverD ⟶OGR	-0.105	0.049	-2.15	0.031
ServiceD ⟶OGR	0.128	0.060	2.14	0.032
HybridD	-0.082	0.050	-1.63	0.103
DL ⟶ PSY	0.500	0.022	22.65	0.000

Source: Primary data

4.8.3 Mediating Role of Employee Psychological Capital on the Relationship Between Abusive Supervision and Organizational Resilience

The results from the structural model of this relationship are shown in Figure 4.11 below.

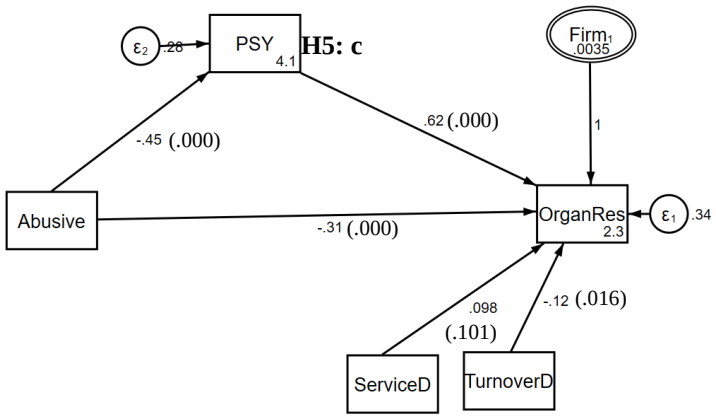

Figure 4.11: Hypothesis 5c Path Diagram

The mediating role of employee psychological capital on the relationship between abusive supervision and organizational resilience is positive and significant $p < .0001$, $R^2 = 0.62$. This shows that psychological capital offsets the negative affective reactions stemming from abusive supervision. The control variable that is significant is monthly turnover $p < 0.016$, $R^2 = -0.12$. The coefficients are shown in Table 4.19 below.

Table 4.19: Hypothesis 5c Path Coefficients

	Coefficient	Standard error	Z statistics	P values
PSY⟶OGR	0.624	0.045	13.91	0.000
AS ⟶ OGR	-0.307	0.033	-9.34	0.000
TurnoverD ⟶OGR	-0.118	0.049	-2.42	0.016
ServiceD ⟶OGR	0.098	0.060	1.64	0.101
AS ⟶ PSY	-0.450	0.023	-19.26	0.000

Source: Primary data

Overall, the mediation analysis of leadership styles and organizational resilience via employees' psychological capital showed that transformational leadership explained 46% of the variance in organizational resilience, directive leadership explained 57% while abusive supervision explained 62% of the variance in organizational resilience.

The hypotheses for this objective are therefore all supported.

H5 (a): Employee psychological capital mediates the positive relationship between transformational leadership and organizational resilience.

H5 (b): Employee psychological capital mediates the positive relationship between directive leadership and organizational resilience.

H5 (c): Employee psychological capital mediates the relationship between abusive supervision and organizational resilience.

4.9 Leadership Styles and Organizational Resilience Mediated by Employees' Psychological Capital, Which is Moderated by the Fear of COVID-19

The results of the moderated mediation model of leadership styles under this present study are shown in the structural model in Figure 4.12 below.

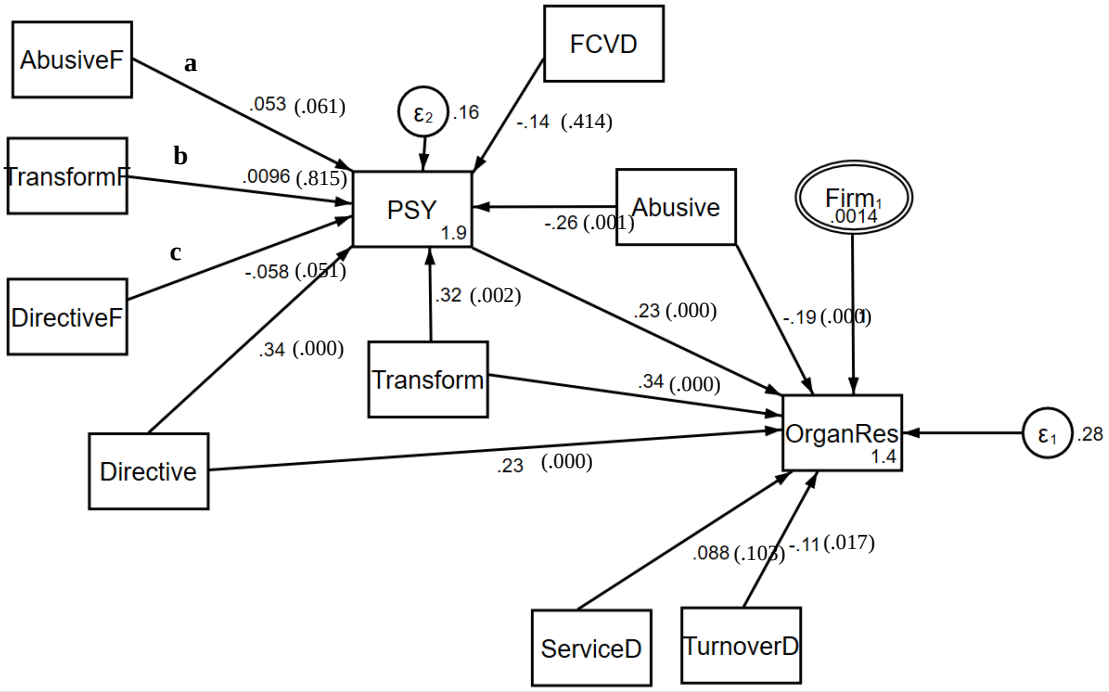

Figure 4.12: Hypothesis 6 Path Diagram

The moderated mediation model with control variables explains 23.3% of the variance in organizational resilience. The results reveal a negative and significant moderated mediation for directive leadership $p < .051$, $R^2 = -.058$; a positive and insignificant moderated mediation for abusive supervision $p < .061$, $R^2 = .053$; and positive and insignificant moderated mediated model for transformational leadership $p < .815$, $R^2 = .010$.

The direct relationships between transformational leadership ($p < 0.000$, $R^2 = 0.338$), directive leadership ($p < 0.000$, $R^2 = 0.225$) and abusive supervision ($p < 0.000$, $R^2 = -0.193$) and organizational resilience were all significant in the moderated mediation model. The control variable that was significant was the monthly turnover $p < 0.017$, $R^2 = -0.105$. The coefficients are shown in Table 4.20 below.

Table 4.20: Hypothesis 6 Path Diagram

	Coefficient	Standard error	Z statistics	P values
PSY⟶ OGR	0.231	0.054	4.34	0.000
TL ⟶ OGR	0.338	0.047	7.22	0.000
DL ⟶ OGR	0.225	0.033	6.75	0.000
AS ⟶ OGR	-0.193	0.032	-6.07	0.000
TurnoverD ⟶OGR	-0.105	0.044	-2.38	0.017
ServiceD ⟶OGR	0.088	0.054	1.63	0.103
TL ⟶ PSY	0.320	0.103	3.09	0.002
DL ⟶ PSY	0.344	0.078	4.41	0.000
AS ⟶ PSY	-0.260	0.076	-3.42	0.001
TransformF ⟶ PSY	0.010	0.041	0.23	0.815
DirectiveF ⟶ PSY	-0.058	0.030	-1.95	0.051
AbusiveF ⟶ PSY	0.053	0.028	1.88	0.061
FCVD ⟶ PSY	-0.139	0.170	-0.82	0.414

Source: Primary data

Overall, for the moderated mediation model, the interaction of directive leadership and fear of COVID-19 resulted in a slight decrease in employees' psychological capital ($p < .051$, $R^2 = -.058$). Abusive supervision and transformational leadership interaction effects with fear of COVID-19 were not significant.

To conclude on the above complex model, to the extent to which all the dynamics hypothesized in this model exist in an SME, the psychological capital mechanism enables SMEs to boast their organizational resilience.

Chapter Five

Discussion

5.1 Introduction

This present research examined how organizational resilience can be promoted from leadership styles and employees' psychological capital during a period of crisis caused by COVID-19 pandemic. Few studies had identified variables that promote organizational resilience and fewer had looked at organizational resilience from the angle of management and staff functioning (Shani, 2020).

This study began with the premise that leadership styles relate to organizational resilience. This study then introduced employee psychological capital as the mechanism through which leadership styles relate to organizational resilience and fear of COVID-19 as the contingent under which leadership styles effect on employee psychological capital is intensified. The results of the tested relationships may help SMEs and researchers to identify more readily available resources for SMEs, in the form of leadership styles and psychological capital, which were found at various levels to promote organizational resilience in a macro global crisis.

5.2 Leadership Styles and Organizational Resilience

Three leadership styles including transformational, directive and abusive styles were considered in this present study. In identifying the most effective leadership style for SMEs to use in a macro crisis to contribute to organizational resilience, the lens of resource-based view was used. The researcher viewed transformational and directive leadership styles as positive intangible resources and abusive supervision as being non-resourceful and this was confirmed empirically. Each of these relationships is discussed at length under the sub-headings below.

5.2.1 Transformational Leadership and Organizational Resilience

This present study related transformational leadership to organizational resilience in a multi-level model. The findings for the study showed that transformational leadership had a significant positive effect on organizational resilience ($p < .0001$, $R^2 = 0.43$). This finding adds to empirical evidence that transformational leadership improves organizational

outcomes especially during a macro crisis period in a developing country perspective. This finding corroborates existing literature that used different contexts and measurement tools.

For instance, Valero et al. (2015) found that transformational leadership had a significant and positive effect on resilience of public and non-profit organizations in the Asian context in South Korea based on the crisis of typhoons and flash floods. To measure resilience, Valero et al. (2015) used a collapsed index of four survey questions related to resilience dimensions of resiliency: robustness, rapidity, resourcefulness, and redundancy. While to measure transformational leadership, a collapsed index of four survey questions related to idealized influence, inspirational motivation, intellectual stimulation, and individualized consideration were used. The present study finding hence supports that transformational leadership significantly and positively affects organizational resilience based on the following tools, MLQ (Avolio & Bass, 2004) for transformational leadership and BRT-14 (Whitman et al., 2013) for organizational resilience.

The finding of positive and significant effect of transformational leadership on organizational resilience also supports theoretical evidence that transformational leadership is an intangible resource that enhances desirable organizational outcomes. Several studies on organizational resilience in small firms view leadership as an important intangible resource that can influence knowledge creation and innovation to enable resilience (Lengnick-Hall et al., 2011; Pal et al., 2014). Understanding connections among human resources (HR) systems, organizational resilience, strategic capabilities and competitive performance contributes to growing literature on intangible assets (Lengnick-Hall et al., 2011). RBV theory application is extended in this present study to highlight transformational leadership style as an intangible resource that manages employees, among other resources in the firm to contribute to organizational resilience.

Barney et al. (2011) noted that studying micro-foundations within the firm was the future of resource-based view of the firm. The field of management has endeavored to link phenomena at the macro level to macro level outcomes, however there was need for multi-level studies that link micro level phenomena to macro outcomes based on the argument that collectives are inherently made up of heterogenous individuals who are make decisions and are the acting entities (Molina-Azorín, 2014). This present study linked

transformational leadership (micro level phenomena) to organizational resilience (macro level phenomena). There is however more room for further analysis on transformational leadership and organizational resilience in other contexts in terms of firm size, country, variables measurement tools and type of crisis.

5.2.2 Directive Leadership and Organizational Resilience

This present study related directive leadership with organizational resilience in a multi-level model. The findings for this study showed that directive leadership had a significant positive effect on organizational resilience ($p < .0001$, $R^2 = 0.28$). This finding corroborates recent literature that showed that directive leadership is effective in high-intensity contexts (Stone & Jawahar, 2021).

Previous authors however studied leadership particularly in clan culture organizations among Marine Corps and suggested that directive leadership requires creating challenge stressors such as heavy workload, complex tasks and work responsibilities that provide workers with growth and achievement opportunities without imposing hindrances such as inadequate resources. Stone and Jawahar (2021) specifically recommended directive leadership to be used for poor performers and subordinates who engage in deviant behaviors. Yun et al. (2005) also noted that directive leadership was effective for complex cases involving less experienced members of medical emergency teams.

This hypothesis finding however differs with that of Bowers et al (2017) who argued that directive leadership might not be effective despite its widespread application by leaders for crisis response. Bowers et al. (2017) demonstrated this through the Crisis Response Leadership Matrix (CRLM) that connected four leadership styles namely directive, transformational, transactional and cognitive styles with their crisis response in order to identify the type of leader equipped to lead through a major crisis given the organizational culture used. Directive leadership was viewed in the CRLM matrix to be important only pre-crisis, for internal crises and for hierarchical organization structures (Bowers et al., 2017). This present study is different from Bowers et al. (2007) since it found directive leadership to be effective in a novel macro global crisis.

To advance theory, this present study applied RBV to highlight directive leadership style as an intangible resource that manages human resources in the firm to contribute to organizational resilience. Kraaijenbrink et al. (2010) argue that while some scholars argue

that RBV is not applicable for small firms because of resource scarcity, the theory still applies especially in light of intangible resources that may give small firms unique competitive advantage. Vogus and Sutcliffe (2007) underscored that resilience emanates from dynamics and processes that create or retain resources including relational, cognitive, emotional or structural resources in a form that is convertible and malleable that enables organizations to cope with surprises. This is important to highlight to SMEs that despite tangible resource constraints, leadership plays a role to contribute to resilient firms.

5.2.3 Abusive Supervision and Organizational Resilience

This present study also related abusive supervision to organizational resilience in a multi-level model. The findings for the study showed that abusive supervision had a significant negative association with organizational resilience ($p < .0001$, $R^2 = -0.22$). Numerous outcomes have been examined in relation to abusive supervision including its effect on desirable outcomes such as organizational citizen behavior, task performance, creativity, innovation (Fischer et al., 2021). Many outcomes relating abusive supervision to undesirable outcomes such as employee deviance, counterproductive work behavior and hostility have also been reported (Fischer et al., 2021). Therefore, the present study's finding corroborates empirical evidence showing that abusive supervisors deteriorate desirable organizational outcomes (Hoobler & Hu, 2013) including psychological capital and organizational resilience.

The present study finding on the association between abusive supervision and organizational resilience adds on theoretical evidence that abusive supervision has a deleterious effect on resources. Based on job-demands resources theory (JD-R), the present study built the scant body of research on destructive leadership behaviors (Mackey et al., 2021) and their potential negative effects on organizational outcomes. Specifically, Abusive supervision has a negative effect on organizational resilience.

This finding differs with that of Bies et al. (2016) who in a book chapter, suggest that organizational outcomes improve as abusive supervision increases hence abuse is a motivator. Bies et al. (2016) noted that subordinates view as motivationally inspiring and not abusive when supervisors criticize their performance especially when the feedback is delivered in ways that enhance trust. This argument by Bies et al. (2016) is a lone one (Tepper et al., 2017).

This present study therefore adds on the conversation on the effects of abusive supervision on organizational outcomes by testing specifically the relationship between abusive supervision and organizational resilience after the novel COVID-19 pandemic among SMEs in Kenya. Hardly had organizational resilience (Senbeto & Hon, 2020) and abusive supervision (Srivastava et al., 2022) been tested in the context of developing countries.

5.3 Leadership Styles and Employee Psychological Capital

The lens of job-demand resources theory (JD-R) was used to propose that during crisis, more positive leadership styles such as transformational and directive leadership styles influence employees' psychological capital as compared to negative styles such as abusive supervision and this was confirmed empirically. The three hypotheses on this relationship between leadership styles and employee psychological capital are discussed under the subheadings below.

5.3.1 Transformational Leadership and Employees' Psychological Capital

This present study related transformational leadership to employee psychological capital, and found that transformational leadership had a significant positive relationship with employee psychological capital ($p < .0001$, $R^2 = 0.381$). Gooty et al. (2009) first proposed that transformational leadership was linked to the psychological capital of followers through the following four attributes; a powerful vision from a transformational leader enables the followers to set goals and believe in them, be hopeful of the future, create belief in their capacity to effectively perform tasks in line with the vision and generate resilience because a favorable future is foreseeable. These attributes link with attributes of psychological capital namely, optimism, hope, self-efficacy and resilience (Gooty et al., 2009).

There are hardly any studies that depict transformational leadership in a negative light however Tourish (2013) in the book 'the dark side of transformational leadership' noted that transformational leaders could be narcissistic and megalomaniac which might not influence followers positively. However, this present study notes as with the majority of scholars, that TL is a positive leadership style that affects followers positively as shown by the positive effect of TL on employees' psychological capital.

The relationship between transformational leadership and psychological capital had hardly been tested before in literature (Schuckert et al., 2018). This present study related transformational leadership to employee psychological capital during a global pandemic period when leadership and followership in organizations was greatly tested.

5.3.2 Directive Leadership and Psychological Capital

This study found that directive leadership had a significant positive relationship with employees' psychological capital ($p < .0001$, $R^2 = 0.225$). From the review of literature, hardly any studies linked directive leadership and employee psychological capital. However studies agree that directive leadership works especially well with subordinates in certain cultures (Chen et al., 2017; Lonati, 2020). Chen et al. (2017) noted that directive leadership works in some cultures such as paternalistic cultures and those with high power distance. In such cultures, the leader is more like a father, a coach, a teacher who conveys to followers the methods by which they have achieved success (Chen et al., 2017).

Previous research identified task-oriented leadership styles as antecedents of employees' psychological capital (Gaan & Shin, 2022). This present study thus related directive leadership, which is a task-oriented leadership style, to employees' psychological capital during the novel COVID-19 global pandemic among SMEs in Kenya and adds onto literature that directive leadership has a positive effect on employees' psychological capital. This is from the context of a high power-distance culture which characterizes African (Kenyan) leadership (Oppong, 2013).

5.3.2 Abusive Supervision and Psychological Capital

This present study related abusive supervision to employees' psychological capital and found that abusive supervision had a significant negative effect on employees' psychological capital ($p < .0001$, $R^2 = -0.138$). This finding is in agreement with Avey et al. (2021) who found that abusive supervisors reduce the employees' psychological capital and recommended that firms should use psychological capital interventions to buffer deleterious impact of abusive supervisors in a study based in the United States.

Agarwal (2019) also found that abusive supervision negatively affected psychological capital of managerial employees in India through the application of conservation of resources theory that viewed abusive supervision as resource draining. Ahmad et al. (2019) also observed that abusive supervision was a stress factor in the subordinate's environment,

which reduced employees' psychological capital in a study of university faculty in Pakistan. Although these studies all found that abusive supervision drains psychological capital of different categories of employees, the present study was based on the COVID-19 period when leadership was highly tested in a global macro crisis and abusive supervision could likely have been more prevalent than ever before due to high levels of stress.

5.4 Employee Psychological Capital and Organizational Resilience

This study found that employees' psychological capital has a significant positive effect on organizational resilience ($p < .0001$, $R^2 = 0.88$). Psychological capital is particularly important for the resilience of small firms who have scarcity of other resources as compared to large firms (Tucci & Clouse, 2005). This study's finding is akin to the observations of Fang et al. (2020), who in a qualitative study in New Zealand found that psychological capital components of hope, optimism, self-efficacy and resilience were important for organizational resilience of small tourism businesses.

The finding expands theoretical evidence in line with JD-R theory that psychological capital is a personal resource that enables employees to achieve organizational outcomes. In line with JD-R theory, employees with high level of personal resources including self-efficacy, optimism and organizational-based self-esteem deal more effectively with demanding conditions (Xanthopoulou et al., 2007). Bakker and Schaufeli (2008) noted that employees make a difference in the success of a business hence the need to provide them with more input such as developing their psychological capital in order to achieve more engagement and output from them. This present study finding hence means that the foundation of organizational resilience partly lies in managing employee strengths particularly, their psychological capital, which sets an SME up for success during a global macro crisis.

5.5 Moderating Role of the Fear of COVID-19 on the Relationship Between Leadership Styles and Employees' Psychological Capital

Based on the transactional theory of stress, this research proposed that leaders could influence employees' psychological capital to a larger extent for employees who were more fearful of COVID-19 than those who were less fearful, and this was partially confirmed. The findings of the moderating role of fear of COVID-19 on the relationship between three

leadership styles of interest to this study namely transformational leadership, directive leadership and abusive supervision on organizational resilience via employee psychological capital are discussed below.

5.5.1 Moderating Role of Fear of COVID-19 on the Relationship Between Transformational Leadership and Employees' Psychological Capital

The finding for this hypothesis indicated that fear of COVID-19 had a significant moderation effect on the relationship between transformational leadership and employee psychological capital such that the association was stronger when fear of COVID was low versus high ($p < .014$, $R^2 = -0.07$). The finding extends the application of transactional theory of stress whereby employees with various levels of fear of COVID-19 based on their cognitive appraisal of the virus could be influenced by leaders to cope. Stress results from negative person-environment relationships and includes emotional response states such as fear, guilt, anger and shame (Lazarus & Folkman, 1987).

Individuals who experience stress adopt relevant coping mechanisms based on attribution of what they know or think and appraisal about what it means for them (Lazarus & Folkman, 1987). Transaction is the language of relationships whereby two basic subsystems of the person and the environment interplay and operate at a new level of analysis (Lazarus & Folkman, 1987). This study measured fear of COVID-19 among SME employees as a marker for crisis and found that fear of COVID-19 had a significant moderation effect on the relationship between transformational leadership and employees' psychological capital. The present study thus made an empirical contribution to scarce studies that look at fear of COVID-19 as a moderator and test the transactional theory of stress during a novel global crisis.

5.5.2 Moderating Role of Fear of COVID-19 on the Relationship Between Directive Leadership and Employee Psychological Capital

The results showed that crisis, operationalized as fear of COVID-19 had a significant moderation effect on the relationship between directive leadership and employee psychological capital such that the association was stronger when fear of COVID was low versus high ($p < .0001$, $R^2 = -0.093$). Hardly had previous literature analyzed this moderated relationship hence the present study opens up avenues for further interrogation

of the moderating role of fear of a crisis on the relationship between directive leadership and psychological capital.

5.5.3 Moderating Role of Fear of COVID-19 on the Relationship Between Abusive Supervision and Employee Psychological Capital

The findings showed that fear of COVID-19 had a significant moderation effect on the relationship between abusive supervision and employee psychological capital such that the association was stronger when fear of COVID was low versus high ($p < .0001$, $R^2 = 0.121$). Abusive supervision is a social problem that exists in various social relationships including the supervisor-subordinates relationship (Liao & Liu, 2015). Previous research noted that the deleterious effects of abusive supervision on employees already include exposure to stress, anxiety and sickness absenteeism (Kelloway et al., 2012). While compounding the interaction of abusive supervision (which is a negative variable) and fear, (which is also a negative variable), there seemed to be a positive effect on employee's psychological capital. This is however interpreted as a positive moderated relationship between two negative variables, which shows that as one variable becomes less negative (approaches zero or becomes positive), the other variable also becomes less negative.

5.6 Mediating Role of Employees' Psychological Capital on the Relationship Between Leadership Styles and Organizational Resilience

The lens of job-demand resources theory (JD-R) was used to propose that during crisis, more positive leadership styles such as transformational and directive leadership styles positively influence organizational resilience through employees' psychological capital as compared to negative styles. The findings regarding the mediating role of employee psychological capital on the relationship between three leadership styles of interest to this study namely, transformational leadership, directive leadership and abusive supervision on organizational resilience are discussed below.

5.6.1 Mediating Role of Employees' Psychological Capital on the Relationship Between Transformational Leadership and Organizational Resilience

The results showed that psychological capital mediated the positive relationship between transformational leadership and organizational resilience ($p < .0001$, $R^2 = 0.46$). Mechanisms and conditions through which transformational leadership leads to beneficial work behaviors have been discussed in literature however psychological linkages through

which employees are motivated to perform better were under-researched (Aryee et al., 2012; Le, 2020) hence this study was motivated to test this hypothesis.

Recent research has linked transformational leadership to employees' psychological capital and organizational citizenship behavior (Le, 2020). According to Le (2020), the positive effects of transformational leadership on psychological capital dimensions (self-efficacy, optimism, hope & resilience) are such that: a) individualized consideration based on counselling, mentoring and coaching enables employees to build self confidence in their abilities hence improve self-efficacy, b) constructive advice and feedback coupled with a positive vision enables employees to feel optimistic, c) high trust relationship between employees and supervisors helps employees build hope by establishing both their will power and their way power, d) employees are also stimulated to look at challenges as opportunities and this builds their resilience.

While Le (2020), paper showed the mediating role of employees' psychological capital on the positive relationship between transformational leadership and organizational citizenship behavior, this study makes a contribution to providing psychological linkages that relate to organizational outcomes by providing evidence on organizational resilience as an outcome.

5.6.2 Mediating Role of Employees' Psychological Capital on the Relationship Between Directive Leadership and Organizational Resilience

The results showed that psychological capital was a significant mediator of the positive relationship between directive leadership and organizational resilience ($p < .0001$, $R^2 = 0.57$). Scant research that relates directive leadership to employees psychological capital existed in literature however researchers noted that directiveness is perceived differently between cultures (Chen et al., 2017; Lonati, 2020) hence the motivation to test directive leadership among SMEs in Kenya.

The contribution for this finding is that within the Kenyan culture dynamics, directive leadership is viewed as helpful to enable employees build confidence in their abilities to achieve goals and directive leadership hence contributes significantly to organizational resilience through the mechanism of employees' psychological capital.

5.6.3 Mediating Role of Employees' Psychological Capital on the Relationship Between Abusive Supervision and Organizational Resilience

The finding on this hypothesis indicated that psychological capital was a significant mediator on the relationship between abusive supervision and organizational resilience ($p < .0001$, $R^2 = 0.62$). Previous research had mainly linked abusive supervision and employees' psychological capital to contributing to organizational citizenship behavior (Ahmad et al., 2019; Avey et al., 2021). This present study tested the mediating role of employee psychological capital on the relationship between abusive supervision and organizational resilience. This study's finding hence adds onto literature that psychological capital offsets the negative affective reactions stemming from abusive supervision.

5.7 Leadership Styles and Organizational Resilience Mediated by Employees' Psychological Capital, Which is Moderated by the Fear of COVID-19

In the present research, the focus was on how leaders activated organizational resilience by influencing the employees' psychological capital under different levels of fear of COVID-19 through various leadership styles. The moderated mediation model with controls explained 23.3% of the variance in organizational resilience ($p < .0001$, $R^2 = 0.233$) hence contributing to literature by providing psychological linkages to organizational outcomes such as organizational resilience.

In relation to previous research, Vakilzadeh and Haase (2020) noted that resilience is highly context specific and diverse resources, capabilities and organizational structures promote resilience. This present study therefore provided empirical evidence of an integration of intangible resources namely, leadership styles and employees' psychological capital during a period of crisis to contribute to organizational resilience.

Chapter Six

Conclusions and Recommendations

6.1 Introduction

The scope of the present research was to examine the role of leadership styles during a major crisis and their effects on psychological capital and resilience of SMEs in Kenya. Despite the scarcity of resources experienced by SMEs, this present study found that leveraging on employees' psychological capital especially during a crisis period can enhance organizational resilience.

The novelty of this study is that it showed that psychological linkages to organizational resilience are important especially for SMEs. In a period of crisis, leadership styles relate to organizational resilience through employees' psychological capital.

The results and discussions outlined in chapter four and five are concluded under each theme below.

6.2 Conclusions

This present study's original contribution to knowledge is that it provides empirical evidence of how individuals within firms (leaders and subordinates) contribute to organizational resilience during a novel macro crisis. This study advocated for the arrangement of intangible resources namely leadership styles, employees' psychological capital and fear of COVID-19 in a moderated mediation model as antecedents of organizational resilience of SMEs in Kenya. The overall moderated mediation model with controls explained 23.3% of the variance in organizational resilience ($p < .0001$, $R^2 = 0.233$) hence contributing to literature by providing psychological linkages to organizational outcomes such as organizational resilience.

The context that enabled the researcher to conduct this study at this time was the novel COVID-19 pandemic that presented an opportunity to test the resilience of firms, especially the most vulnerable ones that are the SMEs, which form the biggest category of enterprises in Kenya. The conclusion under each theme that was tackled in the present study is discussed below.

6.2.1 Leadership Styles and Organizational Resilience

Crisis creates uncertainties and disruptions, which challenge the survival of small and medium-sized enterprises. Although SMEs face resource constraints, they can capitalize on optimizing intangible resources such as leadership styles to improve organizational outcomes during periods of high uncertainty. Thus, determining the types of leadership styles that boost organizational resilience during periods of uncertainty is important. This study found that transformational, directive and abusive styles affect organizational resilience directly.

Few studies had explored the role of leadership in the context of the novel and global COVID-19 pandemic (Chully et al., 2022). This present research analyzed three leadership styles that are prevalent during a crisis, including transformational leadership that is value-based, directive leadership that is task oriented and abusive supervision that represents the dark side of leadership that emerges often during tough times. The present study brings forth the significant positive effects of transformational leadership and directive leadership on organizational resilience and the significant negative effect of abusive supervision on organizational resilience. SMEs therefore need to focus on appropriate leadership styles such as transformational and directive styles that enhance organizational resilience.

6.2.2 Leadership Styles and Psychological Capital

Employee psychological capital can arise from a leader's style (Avey, 2014; Wu & Nguyen, 2019), however, this link was not sufficiently studied (Le, 2020) more so during the novel COVID-19 period. This present study found that leaders affect their follower's psychological capital especially during crisis by the way they lead such that transformational and directive leadership boosts employees' psychological capital while abusive supervision deteriorates the employees' psychological capital. SMEs should therefore be intentional during crises to use leadership styles that boost employees' psychological capital.

6.2.3 Psychological Capital and Organizational Resilience

Psychological linkages through which employees are motivated to perform better were under-researched (Aryee et al., 2012; Le, 2020). This present study found that employee

psychological capital is the mechanism through which transformational, directive and abusive leadership styles affect organizational resilience.

This shows that positive psychological capital is an important asset for organizational resilience. Despite scarcity of resources, SMEs should therefore harness intangible resources such as employees' psychological capital for organizational resilience.

6.2.3 Moderating Role of the Fear of COVID-19 on the Relationship Between Leadership Styles and Employees' Psychological Capital

Conditions under which leadership styles relate to employee psychological well-being are under researched (Arnold, 2017). This present study found that the interactions between transformational and directive leadership styles and fear of COVID-19 resulted in less employees' psychological capital. While compounding the interaction of abusive supervision and fear of COVID-19 there seemed to be a positive effect on employees' psychological capital. A positive moderated relationship between two negative variables shows that as one variable becomes less negative the other variable also becomes less negative.

In overall terms, this moderation means that leaders bear influence on their subordinates' psychological capital since employees look up to them to cope especially during a macro crisis.

6.2.4 Mediating Role of Employees' Psychological Capital on the Relationship Between Leadership Styles and Organizational Resilience

Mechanisms through which leadership styles influence organizational resilience are under researched (Barasa et al., 2018). In the present study, employee psychological capital was found to be a significant mediator between the three leadership styles under study and organizational resilience. This means that psychological capital serves as a resource through which leadership affects organizational resilience. The study brings forth the beneficial effects of transformational leadership and directive leadership on organizational resilience via the link of employees' psychological capital in a period of crisis caused by COVID-19. This present study also brought out the unique role of employees' psychological capital offsetting the negative affective reactions stemming from abusive supervision. SMEs therefore need to boost employees' psychological capital especially during crisis periods such as the global pandemic to achieve resilience.

6.2.5 Leadership Styles and Organizational Resilience Mediated by Employees' Psychological Capital Which is Moderated by Fear of COVID-19

The present work responded to calls to investigate the underlying mechanisms and conditions through which leadership manifests into work outcomes such as organizational resilience (Linnenluecke, 2017; Ozanne et al., 2022; Stoverink et al., 2020). This study, with the use of a simultaneous moderated mediation model, brought forth the significant beneficial effect of employees' psychological capital in offsetting the negative effects of crisis and enhancing organizational resilience.

6.3 Recommendations

Based on the findings of this present research, the following recommendations are made.

6.3.1 Recommendations for Practitioners in SMEs and Academics

First, the use of multilevel models to understand how resilience can be scaled up based on the interdependent nature of organizational resilience across individual and organizational levels is important for practitioners in SMEs and academicians as they gain evidence for the role of leaders and subordinates in contributing to organizational resilience. Organizations are not always hit by adversity in their entirety, but adversity manifests differently within and across organizations hence the importance of interplay of multilevel factors.

Second, certain leadership styles in particular transformational and directive styles positively influence organizational resilience during a crisis and this presents important implications for the management of human resources in SMEs. SMEs should be aware and ensure they use leadership styles that are beneficial to meeting the organizational resilience outcome despite the pressure that comes with a crisis. Organizational incentives for the use of these positive leadership styles during crisis may be an additional intervention. SMEs can select and retain leaders who adopt appropriate leadership styles during crisis to improve their resilience.

Third, boosting the employees' psychological capital during a crisis is very important for organizational resilience. Psychological capital is a unique intangible resource for SMEs during crisis that even offsets the negative effects of abusive supervision. SMEs should be aware of and use leadership styles that boost the employees' psychological capital for improved contribution of employees to meeting organizational outcomes.

Fourth, it pays for leaders to be non-abusive in the workplace and the study recommends psychological capital boosting interventions to minimize the effects of abusive supervision on employees to contribute to organizational resilience. SMEs should therefore be aware and incorporate human resources practices that intervene to minimize abusive supervision as well as adopt programs that build employee psychological capital during a crisis.

Last, the present research built and tested a conceptual model involving leadership style, employees' psychological capital, and fear of COVID-19 in predicting resilience. While this study makes an empirical and theoretical contribution to the studies on individual level antecedents of organizational resilience, it lays ground for further analysis using group level variables to add to how resources translate into organizational level outcomes. More multilevel studies are needed to understand how resilience can be scaled up based on the interdependent nature of organizational resilience across individual, team, and organizational levels.

6.3.2 Recommendations for Policy

Access to information on how to utilize resources increases the probability of resilience of SMEs. Public policy plays an important role in facilitating resilience of enterprises. This study provides the evidence for the importance of intangible and frugal resources such as leadership styles and psychological capital for SME resilience in Kenya. In any economy, organizations of all sizes need to be resilient. SME resilience differs from that of large firms due to a greater level of tangible resource constraints. This research makes a policy recommendation for creating resilient SMEs in Kenya using intangible resources by proposing a model for enhancing organizational resilience of SMEs through optimizing the joint role of leadership styles and employees' psychological capital in a period of extreme crisis. SMEs should therefore ensure they optimize the frugal resources that are within their reach.

6.4 Limitations and Areas for Further Research

This present study had some key strengths. For instance, it was set to within a novel global pandemic to evaluate resilience from a leadership perspective. The present study also had a good representation of the population in terms of the sectors and county representations, (with service sector SMEs being the majority in Kenya and Nairobi County having the

most SMEs in Kenya). The present study also had a strength in achieving an almost 50/50 gender representation among its respondents.

This present study was however limited in some ways that future researchers can use to enhance knowledge. First, a longitudinal design to see whether resilience is stable over time is recommended for future research. This will enable researchers to answer questions on whether high resilience companies survive in the long term. Another limitation of the use of the present (cross-sectional) design is that this research is unable to attribute causality, which can be overcome by use of longitudinal or experimental designs. Additionally, for the assessment of a mediator variable, it would also have been best to collect data over two or three time periods to determine temporal causality.

Secondly, future studies can expand into other organizational contexts other than SMEs such as the public administration, large firms and nonprofits to assess antecedents of organizational resilience since resilience is not a one-size fits all construct. Also, this study only explored SME that are licensed, overlooking many SME that exist, especially in Kenya, that are not licensed.

Thirdly, future studies can assess whether certain aspects about leaders matter for resilience, for instance, the leader's age and gender. More research questions can arise from these for instance, are older leaders more prone to certain leadership styles than younger leaders? Do different genders demonstrate different leadership styles?

Fourthly, common method variance concerns may be a limitation to this present research. The research data were collected only from the employees' perspective, which may have led to common method bias (Podsakoff et al., 2003). Future research could utilize multiple sources of data and vary the order of measures. For example, half the respondents from SMEs could have completed leadership measures first, while the other half could have completed them second after the mediator/moderator variables have been collected to minimize carry over effects from other measures.

Fifthly, other control variables could also help to refine the assessed relationships. assessed Other controls could be the strategic leadership of the organization and tangible resources available to address the crisis.

Sixthly, future research could expand on the analyses of all the second order variables in the hypothesized relationships to provide a more nuanced study of individual transformational leadership behaviors, psychological capital tenets and organizational resilience capabilities.

References

Acharya, A. S., Prakash, A., Saxena, P., & Nigam, A. (2013). Sampling: Why and how of it? *Indian Journal of Medical Specialities, 4* (2). https://doi.org/10.7713/ijms.2013.0032

Acquaah, M., Amoako-Gyampah, K., & Jayaram, J. (2011). Resilience in family and nonfamily firms: An examination of the relationships between manufacturing strategy, competitive strategy and firm performance. *International Journal of Production Research, 49* (18), 5527–5544. https://doi.org/10.1080/00207543.2011.563834

Agarwal, U. A. (2019). Examining links between abusive supervision, PsyCap, LMX and outcomes. *Management Decision, 57* (5), 1304–1334. https://doi.org/10.1108/MD-02-2017-0103

Ahmad, J., Athar, M. R., Azam, R. I., Hamstra, M. R. W., & Hanif, M. (2019). A resource perspective on abusive supervision and extra-role behaviors: The role of subordinates' psychological capital. *Journal of Leadership & Organizational Studies, 26* (1), 73–86. https://doi.org/10.1177/1548051818767391

Ahorsu, D. K., Lin, C.-Y., Imani, V., Saffari, M., Griffiths, M. D., & Pakpour, A. H. (2022). The fear of COVID-19 scale: Development and initial validation. *International Journal of Mental Health and Addiction, 20* (3), 1537–1545. https://doi.org/10.1007/s11469-020-00270-8

Aleksić, A., Stefanović, M., Arsovski, S., & Tadić, D. (2013). An assessment of organizational resilience potential in SMEs of the process industry, a fuzzy approach. *Journal of Loss Prevention in the Process Industries, 26* (6), 1238–1245. https://doi.org/10.1016/j.jlp.2013.06.004

Anderson, M. H., & Sun, P. Y. T. (2017). Reviewing leadership styles: Overlaps and the need for a new 'full-range' theory. *International Journal of Management Reviews, 19* (1), 76–96. https://doi.org/10.1111/ijmr.12082

Annarelli, A., & Nonino, F. (2016). Strategic and operational management of organizational resilience: Current state of research and future directions. *Omega, 62*, 1–18. https://doi.org/10.1016/j.omega.2015.08.004

Arnold, K. A. (2017). Transformational leadership and employee psychological well-being: A review and directions for future research. *Journal of Occupational Health Psychology*, *22*(3), 381–393. https://doi.org/10.1037/ocp0000062

Aryee, S., Walumbwa, F. O., Zhou, Q., & Hartnell, C. A. (2012). Transformational leadership, innovative behavior, and task performance: Test of mediation and moderation processes. *Human Performance*, *25* (1), 1–25. https://doi.org/ 10.1080/08959285.2011.631648

Asparouhov, T., & Muth´en, B. (2018). *SRMR in Mplus.* Retreived from: http://www. statmodel. com/download/SRMR2. pdf.

Avey, J. B., Agarwal, U., & Gill, J. K. (2021). How does abusive supervision hurt employees? The role of positive psychological capital. *International Journal of Productivity and Performance Management*. https://doi.org/10.1108/IJPPM-12-2019-0559

Avey, J. B., Reichard, R. J., Luthans, F., & Mhatre, K. H. (2011). Meta-analysis of the impact of positive psychological capital on employee attitudes, behaviors, and performance. *Human Resource Development Quarterly*, *22* (2), 127–152. https://doi.org/10.1002/hrdq.20070

Avolio, B. J., & Bass, B. M. (2004). *MLQ multifactor leadership questionnaire. Manual and sample set. Redwood City, CA: MindGarden*. Inc.

Baardwijk, N. van, & Reinmoeller, P. (2005). The link between diversity and resilience. *MIT Sloan Management Review*, *46* (4), 61–65.

Bakker, A. B., & Demerouti, E. (2007). The Job Demands-Resources model: State of the art. *Journal of Managerial Psychology*, *22* (3), 309–328. https://doi.org/10. 1108/02683940710733115

Bakker, A. B., & Schaufeli, W. B. (2008). Positive organizational behavior: Engaged employees in flourishing organizations. *Journal of Organizational Behavior*, *29* (2), 147–154. https://doi.org/10.1002/job.515

Barasa, E., Mbau, R., & Gilson, L. (2018). What is resilience and how can it be nurtured? A systematic review of empirical literature on organizational resilience. *International Journal of Health Policy and Management*, *7*(6), 491–503.

Barney, J. B. (2001). Resource-based theories of competitive advantage: A ten-year retrospective on the resource-based view. *Journal of Management,* 9.

Barney, J. B., Ketchen Jr., D. J., & Wright, M. (2011). The future of resource-based theory: Revitalization or decline? *Journal of Management*, *37*, 1299–1315. https://doi.org/10.1177/0149206310391805

Bass, B. M. (1985). *Leadership and performance beyond expectations*. Free Press.

Bass, B. M. (1999). Two decades of research and development in transformational leadership. *European Journal of Work and Organizational Psychology*, *8* (1), 9–32. https://doi.org/DOI: 10.1080/135943299398410

Beermann, M. (2011). Linking corporate climate adaptation strategies with resilience thinking. *Journal of Cleaner Production*, *19* (8), 836–842. https://doi.org/10.1016/j.jclepro.2010.10.017

Bhaduri, R. M. (2019). Leveraging culture and leadership in crisis management. *European Journal of Training and Development*, *43* (5/6), 554–569. https://doi.org/10.1108/EJTD-10-2018-0109

Bhattacherjee, A. (2012). Social science research: Principles, methods, and practices. *Textbooks collection*. https://scholarcommons.usf.edu/oa_textbooks/3

Bies, R. J., Tripp, T. M., & Shapiro, D. L. (2016). Abusive leaders or master motivators? "Abusive" is in the eye of the beholder. In *understanding the high-performance workplace*. Routledge.

Biggs, D. (2020). Understanding resilience in a vulnerable industry. *Ecology and Society*, 19.

Blatt, R. (2009). Resilience in entrepreneurial teams: Developing the capacity to pull through. *Frontiers of Entrepreneurship Research*, *29* (11), 1–14.

Bligh, M. C., Kohles, J. C., & Meindl, J. R. (2004). Charisma under crisis: Presidential leadership, rhetoric, and media responses before and after the September 11th terrorist attacks. *The Leadership Quarterly*, *15* (2), 211–239. https://doi.org/10.1016/j.leaqua.2004.02.005

Boin, A., & 'T Hart, P. (2007). The crisis approach. In H. Rodríguez, E. L. Quarantelli, & R. R. Dynes (Eds.), *Handbook of Disaster Research* (pp. 42–54). Springer. https://doi.org/10.1007/978-0-387-32353-4_3

Bowers, M. R., Hall, J. R., & Srinivasan, M. M. (2017). Organizational culture and leadership style: The missing combination for selecting the right leader for effective crisis management. *Business Horizons*, *60*(4), 551–563. https://doi.org/10.1016/j.bushor.2017.04.001

Brown, C., Seville, E., & Vargo, J. (2017). Measuring the organizational resilience of critical infrastructure providers: A New Zealand case study. *International Journal of Critical Infrastructure Protection*, *18*, 37–49. https://doi.org/10.1016/j.ijcip.2017.05.002

Bryman, A. (2016). *Social Research Methods* (Fifth Edition). Oxford University Press.

Bujang, M. A. (2021). A step-by-step process on sample size determination for medical research. *The Malaysian Journal of Medical Sciences: MJMS*, *28* (2), 15–27. https://doi.org/10.21315/mjms2021.28.2.2

Burnard, K., & Bhamra, R. (2011). Organisational resilience: Development of a conceptual framework for organisational responses. *International Journal of Production Research*, *49* (18), 5581–5599. https://doi.org/10.1080/00207543.2011.563827

Burton, J. P., Hoobler, J. M., & Scheuer, M. L. (2012). Supervisor workplace stress and abusive supervision: The buffering effect of exercise. *Journal of Business and Psychology*, *27* (3), 271–279. https://doi.org/10.1007/s10869-011-9255-0

Chen, T., Li, F., & Leung, K. (2017). Whipping into shape: Construct definition, measurement, and validation of directive-achieving leadership in Chinese culture. *Asia Pacific Journal of Management*, *34* (3), 537–563. https://doi.org/10.1007/s10490-017-9511-6

Chong, S., Huang, Y., & Chang, C.-H. (Daisy). (2020). Supporting interdependent telework employees: A moderated-mediation model linking daily COVID-19 task setbacks to next-day work withdrawal. *Journal of Applied Psychology*, *105*(12), 1408–1422. https://doi.org/10.1037/apl0000843

Christmann, A., & Van Aelst, S. (2006). Robust estimation of Cronbach's alpha. *Journal of Multivariate Analysis*, *97*(7), 1660–1674. https://doi.org/10.1016/j.jmva.2005.05.012

Chully, A. A., Jose, J., & M, L. (2022). Authentic leadership in a pandemic world: An exploratory study in the Indian context. *Journal of Management Development*, *41*(5), 301–316. https://doi.org/10.1108/JMD-10-2021-0281

Crick, F., Eskander, S. M. S. U., Fankhauser, S., & Diop, M. (2018). How do African SMEs respond to climate risks? Evidence from Kenya and Senegal. *World Development*, *108*, 157–168. https://doi.org/10.1016/j.worlddev.2018.03.015

Dai, Y.-D., Zhuang, W.-L., & Huan, T.-C. (2019). Engage or quit? The moderating role of abusive supervision between resilience, intention to leave and work engagement. *Tourism Management*, *70*, 69–77. https://doi.org/10.1016/j.tourman.2018.07.014

Demerouti, E., & Bakker, A. B. (2011). The job demands-resources model: Challenges for future research. *SA Journal of Industrial Psychology*, *37*(2), 01–09.

Demerouti, E., Bakker, A. B., Nachreiner, F., & Schaufeli, W. B. (2001). The job demands-resources model of burnout. *Journal of Applied Psychology*, *86* (3), 499–512. https://doi.org/10.1037/0021-9010.86.3.499

Dijkstra, J., Bouman, L., Bakker, D. M., & van Assen, M. A. L. M. (2019). Modeling the micro-macro link: Understanding macro-level outcomes using randomization tests on micro-level data. *Social Science Research*, *77*, 79–87. https://doi.org/10.1016/j.ssresearch.2018.08.013

Dimino, K., Horan, K. M., & Stephenson, C. (2020). Leading our frontline heroes through times of crisis with a sense of hope, efficacy, resilience, and optimism. *Nurse Leader*, *18* (6), 592–596. https://doi.org/10.1016/j. mnl.2020.05.011

Duchek, S. (2020). Organizational resilience: A capability-based conceptualization. *Business Research*, *13*(1), 215–246. https://doi.org/10.1007/s40685-019-0085-7

Duchek, S., Raetze, S., & Scheuch, I. (2020). The role of diversity in organizational resilience: A theoretical framework. *Business Research*, *13* (2), 387–423. https://doi.org/10.1007/s40685-019-0084-8

Envick, B. R. (2004). Beyond human and social capital: The importance of positive psychological capital for entrepreneurial success. *Academy of Entrepreneurship. Proceedings.*, *10*.

Euwema, M. C., Wendt, H., & van Emmerik, H. (2007). Leadership styles and group organizational citizenship behavior across cultures. *Journal of Organizational Behavior*, *28*(8), 1035–1057. https://doi.org/10.1002/job.496

Ewertowski, T., & Butlewski, M. (2021). Development of a pandemic residual risk assessment tool for building organizational resilience within Polish enterprises. *International Journal of Environmental Research and Public Health*, *18* (13), Article 13. https://doi.org/10.3390/ijerph18136948

Fang, S. (Echo), Prayag, G., Ozanne, L. K., & de Vries, H. (2020). Psychological capital, coping mechanisms and organizational resilience: Insights from the 2016 Kaikoura earthquake, New Zealand. *Tourism Management Perspectives*, *34*, 100637. https://doi.org/10.1016/j.tmp.2020.100637

Fang, Y.-C., Chen, J.-Y., Wang, M.-J., & Chen, C.-Y. (2019). The impact of inclusive leadership on employees' innovative behaviors: the mediation of psychological capital. *Frontiers in Psychology*, *10*. https://doi.org/10.3389/fpsyg.2019.01803

Felland, L. E., Lesser, C. S., Benoit Staiti, A., Katz, A., & Lichiello, P. (2003). The resilience of the health care safety net, 1996-2001. *Health Services Research*, *38* (1p2), 489–502. https://doi.org/10.1111/1475-6773.00126

Fischer, T., Tian, A. W., Lee, A., & Hughes, D. J. (2021). Abusive supervision: A systematic review and fundamental rethink. *The Leadership Quarterly*, *32*(6), 101540. https://doi.org/10.1016/j.leaqua.2021.101540

Fornell, C., & Larcker, D. F. (1981). Structural equation models with unobservable variables and measurement error: algebra and statistics. *journal of marketing research*, *18* (3), 382–388. https://doi.org/10.1177/002224378101800313

Frieder, R. E., Hochwarter, W. A., & DeOrtentiis, P. S. (2015). Attenuating the negative effects of abusive supervision: The role of proactive voice behavior and resource management ability. *The Leadership Quarterly*, *26* (5), 821–837. https://doi.org/10.1016/j.leaqua.2015.06.001

Gaan, N., & Shin, Y. (2022). Multilevel analysis of resonant leadership and subordinate's work performance during COVID-19: A study of the Indian software industry. *Current Psychology*. https://doi.org/10.1007/s12144-022-02746-3

Gang, W., Oh, I.-S., Courtright, S., & Colbert. (2011). Transformational leadership and performance across criteria and levels: A meta-analytic review of 25 years of research. *Group & Organization Management*, *36* (2), 223–270. https://doi.org/10.1177/1059601111401017

Gooty, J., Gavin, M., Johnson, P. D., Frazier, M. L., & Snow, D. B. (2009). In the eyes of the beholder: transformational leadership, positive psychological capital, and performance. *Journal of Leadership & Organizational Studies*, *15*(4), 353–367. https://doi.org/10.1177/1548051809332021

Guillaume, Y. R. F., Dawson, J. F., Otaye-Ebede, L., Woods, S. A., & West, M. A. (2015). *Harnessing demographic differences in organizations: What moderates the effects of workplace diversity?* 28.

Guo, L., Decoster, S., Babalola, M. T., De Schutter, L., Garba, O. A., & Riisla, K. (2018). Authoritarian leadership and employee creativity: The moderating role of psychological capital and the mediating role of fear and defensive silence. *Journal of Business Research*, *92*, 219–230. https://doi.org/10.1016/j.jbusres.2018.07.034

Gyu Park, J., Sik Kim, J., Yoon, S. W., & Joo, B.-K. (2017). The effects of empowering leadership on psychological well-being and job engagement: The mediating role of psychological capital. *Leadership & Organization Development Journal*, *38* (3), 350–367. https://doi.org/10.1108/LODJ-08-2015-0182

Hair, J. F., Black, W. C., & Babin, B. J. (2010). *Multivariate data analysis: A global perspective*. Pearson Education.

Hair, J. F., Ringle, C. M., & Sarstedt, M. (2011). PLS-SEM: Indeed a silver bullet. *Journal of Marketing Theory and Practice*, *19* (2), 139–152. https://doi.org/10.2753/MTP1069-6679190202

Hair, J. F., Risher, J. J., Sarstedt, M., & Ringle, C. M. (2019). When to use and how to report the results of PLS-SEM. *European Business Review*, *31*(1), 2–24. https://doi.org/10.1108/EBR-11-2018-0203

Halverson, S. K., Murphy, S. E., & Riggio, R. E. (2004). Charismatic leadership in crisis situations: A laboratory investigation of stress and crisis. *Small Group Research*, *35* (5), 495–514. https://doi.org/10.1177/1046496404264178

Henseler, J., Ringle, C. M., & Sarstedt, M. (2015). A new criterion for assessing discriminant validity in variance-based structural equation modeling. *Journal of the Academy of Marketing Science*, *43*(1), 115–135. https://doi.org/10.1007/s11747-014-0403-8

Hobfoll, S. E. (2002). Social and psychological resources and adaptation. *Review of General Psychology*, *6*(4), 307–324. https://doi.org/10.1037/1089-2680.6.4.307

Hobfoll, S. E., Johnson, R. J., Ennis, N., & Jackson, A. P. (2003). Resource loss, resource gain, and emotional outcomes among inner city women. *Journal of Personality and Social Psychology*, *84*(3), 632–643. https://doi.org/10.1037/0022-3514.84.3.632

Holling, C. S. (1973). *Resilience and stability of ecological systems*. International Institute for Applied Systems Analysis Laxenburg. https://www.cambridge.org/core/services/aop-cambridgecore/content/view/93347024CC60F4C3130F936513402FE3/stamped-9781009177849c32_460-482.pdf/c_s_holling_1973.pdf

Hoobler, J. M., & Hu, J. (2013). A model of injustice, abusive supervision, and negative affect. *The Leadership Quarterly, 24* (1), 256–269. https://doi.org/10.1016/j.leaqua.2012.11.005

House, R. J., Hanges, P. J., Javidan, M., Dorfman, P. W., & Gupta, V. (2004). *Culture, Leadership, and Organizations: The GLOBE Study of 62 Societies*. SAGE Publications.

Hu, J., He, W., & Zhou, K. (2020). The mind, the heart, and the leader in times of crisis: How and when COVID-19-triggered mortality salience relates to state anxiety, job engagement, and prosocial behavior. *Journal of Applied Psychology*, *105* (11), 1218–1233. https://doi.org/10.1037/apl0000620

Islam, T., Tariq, J., & Usman, B. (2018). Transformational leadership and four-dimensional commitment: Mediating role of job characteristics and moderating role of participative and directive leadership styles. *Journal of Management Development*, *37* (9/10), 666–683. https://doi.org/10.1108/JMD-06-2017-0197

Israel, G. (2003). *Determining sample size.* Journal of Geographic Information System.

Jackson, T., Amaeshi, K., & Yavuz, S. (2008). Untangling African indigenous management: Multiple influences on the success of SMEs in Kenya. *Journal of World Business, 43*(4), 400–416. https://doi.org/10.1016/j.jwb.2008.03.002

Johanson, G., & Brooks, G. (2010). *Initial scale development: Sample size for pilot studies*. https://journals.sagepub.com/doi/abs/10.1177/0013164409355692

Judge, T. A., & Bono, J. E. (2000). Five-factor model of personality and transformational leadership. *Journal of Applied Psychology*, *85*(5), 751–765. https://doi.org/10.1037/0021-9010.85.5.751

Kelloway, E. K., Turner, N., Barling, J., & Loughlin, C. (2012). Transformational leadership and employee psychological well-being: The mediating role of employee trust in leadership. *Work & Stress*, *26* (1), 39–55. https://doi.org/10.1080/02678373.2012.660774

Kenya National Bureau of Statistics. (2016). *Micro, small and medium establishment (MSME) survey basic report*.

Kline, R. B. (2015). *Principles and practice of structural equation modeling, fourth edition*. Guilford Publications.

Koo, T. K., & Li, M. Y. (2016). A guideline of selecting and reporting intraclass correlation coefficients for reliability research. *journal of chiropractic medicine*, *15* (2), 155–163. https://doi.org/10.1016/j.jcm.2016.02.012

Kraaijenbrink, J., J. -C Spender, & Aard J. Groen. (2010). *The resource-based view: A review and assessment of its critiques*. 24.

Kuntz, J. C. (2021). Resilience in times of global pandemic: Steering recovery and thriving trajectories. *Applied Psychology*, *70* (1), 188–215. https://doi.org/10.1111/apps.12296

Lazarus, R. S., & Folkman, S. (1987). Transactional theory and research on emotions and coping. *European Journal of Personality*, *1* (3), 141–169. https://doi.org/10.1002/per.2410010304

Le, P. B. (2020). How transformational leadership facilitates radical and incremental innovation: The mediating role of individual psychological capital. *Asia-Pacific Journal of Business Administration*, *12* (3/4), 205–222. https://doi.org/10.1108/APJBA-04-2020-0129

Lee, A. V., Vargo, J., & Seville, E. (2013). Developing a tool to measure and compare organizations' resilience. *Natural Hazards Review*, *14* (1), 29–41. https://doi.org/10.1061/(ASCE)NH.1527-6996.0000075

Lee, J., Shapiro, V. B., Kim, B. K. E., & Yoo, J. P. (2018). Multilevel structural equation modeling for social work researchers: an introduction and application to healthy youth development. *Journal of the Society for Social Work and Research*, *9* (4), 689–719. https://doi.org/10.1086/701526

Lengnick-Hall, C. A., Beck, T. E., & Lengnick-Hall, M. L. (2011). Developing a capacity for organizational resilience through strategic human resource management. *Human Resource Management Review*, *21* (3), 243–255. https://doi.org/10.1016/j.hrmr.2010.07.001

Liao, Z., & Liu, Y. (2015). Abusive supervision and psychological capital: A mediated moderation model of team member support and supervisor-student exchange. *Frontiers of Business Research in China.*, *9* (4), 576.

Linnenluecke, M. K. (2017). Resilience in business and management research: A review of influential publications and a research agenda: resilience in business and management research. *international journal of management reviews*, *19* (1), 4–30. https://doi.org/10.1111/ijmr.12076

Llorens, S., Bakker, A. B., Schaufeli, W., & Salanova, M. (2006). Testing the robustness of the job demands-resources model. *International Journal of Stress Management*, *13* (3), 378–391. https://doi.org/10.1037/1072-5245.13.3.378

Lonati, S. (2020). What explains cultural differences in leadership styles? On the agricultural origins of participative and directive leadership. *The Leadership Quarterly*, *31*(2), 101305. https://doi.org/10.1016/j.leaqua.2019.07.003

Lupșa, D., Vîrga, D., Maricuțoiu, L. P., & Rusu, A. (2020). Increasing psychological capital: A pre-registered meta-analysis of controlled interventions. *Applied Psychology*, *69* (4), 1506–1556. https://doi.org/10.1111/apps.12219

Luthans, B. C., Luthans, K. W., & Avey, J. B. (2014). Building the leaders of tomorrow: The development of academic psychological capital. *Journal of Leadership & Organizational Studies*, *21* (2), 191–199. https://doi.org/10.1177/1548051813517003

Luthans, F., Avey, J. B., Avolio, B. J., Norman, S. M., & Combs, G. M. (2006). Psychological capital development: Toward a micro-intervention. *Journal of Organizational Behavior*, *27* (3), 387–393. https://doi.org/10.1002/job.373

Luthans, F., Youssef, C. M., & Avolio, B. J. (2007). *Psychological capital: Developing the human competitive edge*. Oxford University Press.

Mackey, J. D., Parker Ellen, B., McAllister, C. P., & Alexander, K. C. (2021). The dark side of leadership: A systematic literature review and meta-analysis of destructive leadership research. *Journal of Business Research*, *132*, 705–718. https://doi.org/10.1016/j.jbusres.2020.10.037

Madi Odeh, R. B. S., Obeidat, B. Y., Jaradat, M. O., Masa'deh, R., & Alshurideh, M. T. (2021). The transformational leadership role in achieving organizational resilience through adaptive cultures: The case of Dubai service sector. *International Journal of Productivity and Performance Management*. https://doi.org/10.1108/IJPPM-02-2021-0093

McCarthy, I. P., Collard, M., & Johnson, M. (2017). Adaptive organizational resilience: An evolutionary perspective. *Current Opinion in Environmental Sustainability*, *28*, 33–40. https://doi.org/10.1016/j.cosust.2017.07.005

McFarland, L. A., Reeves, S., Porr, W. B., & Ployhart, R. E. (2020). Impact of the COVID-19 pandemic on job search behavior: An event transition perspective. *Journal of Applied Psychology*, *105* (11), 1207–1217. https://doi.org/10.1037/apl0000782

McManus, S., Seville, E., Vargo, J., & Brunsdon, D. (2008). Facilitated process for improving organizational resilience. *Natural Hazards Review*, *9* (2), 81–90. https://doi.org/10.1061/(ASCE)1527-6988(2008)9:2(81)

McMurray, A. J., Pirola-Merlo, A., Sarros, J. C., & Islam, M. M. (2010). Leadership, climate, psychological capital, commitment, and wellbeing in a non-profit organization. *Leadership & Organization Development Journal*, *31*(5), 436–457. https://doi.org/10.1108/01437731011056452

Memon, M. A., Ting, H., Cheah, J.-H., Thurasamy, R., Chuah, F., & Cham, T. H. (2020). Sample Size for Survey Research: Review and Recommendations. *Journal of Applied Structural Equation Modeling*, *4*(2), i–xx. https://doi.org/10.47263/JASEM.4(2)01

Milofsky, C. (2018). *The role of authoritative leadership in voluntary organizations*. *2*, 15.

Misati, E., Walumbwa, F. O., Lahiri, S., & Kundu, S. K. (2017). The internationalization of african small and medium enterprises (SMEs): A South-North pattern. *Africa*

Journal of Management, *3* (1), 53–81. https://doi.org/10.1080/23322373.2016.1275940

Molina-Azorín, J. F. (2014). Micro foundations of strategic management: Toward micro–macro research in the resource-based theory. *BRQ Business Research Quarterly*, *17*(2), 102–114. https://doi.org/10.1016/j.brq.2014.01.001

Molina-Azorín, J. F., Pereira-Moliner, J., López-Gamero, M. D., Pertusa-Ortega, E. M., & Tarí, J. J. (2020). *Multilevel research: Foundations and opportunities in management*. 15.

Mooi, E., Sarstedt, M., & Mooi-Reci, I. (2018). Data. In E. Mooi, M. Sarstedt, & I. Mooi-Reci (Eds.), *Market Research: The process, data, and methods using Stata* (pp. 27–50). Springer. https://doi.org/10.1007/978-981-10-5218-7_3

Mulki, J. P., Jaramillo, F., Malhotra, S., & Locander, W. B. (2012). Reluctant employees and felt stress: The moderating impact of manager decisiveness. *Journal of Business Research*, *65* (1), 77–83. https://doi.org/10.1016/j.jbusres.2011.01.019

Nandkeolyar, A. K., Shaffer, J. A., Li, A., Ekkirala, S., & Bagger, J. (2014). Surviving an abusive supervisor: The joint roles of conscientiousness and coping strategies. *Journal of Applied Psychology*, *99* (1), 138–150. https://doi.org/10.1037/a0034262

Nanjundeswaraswamy, T. S., & Swamy, D. R. (2014). *Leadership_styles-with-cover-page-v2.pdf*. JSS Academy of Technical Education, Bangalore, INDIA.

Newman, A., Nielsen, I., Smyth, R., Hirst, G., & Kennedy, S. (2018). The effects of diversity climate on the work attitudes of refugee employees: The mediating role of psychological capital and moderating role of ethnic identity. *Journal of Vocational Behavior*, *105*, 147–158. https://doi.org/10.1016/j.jvb.2017.09.005

Nielsen, K., Randall, R., Yarker, J., & Brenner, S.-O. (2008). The effects of transformational leadership on followers' perceived work characteristics and psychological well-being: A longitudinal study. *Work & Stress*, *22*(1), 16–32. https://doi.org/10.1080/02678370801979430

Nielsen, M. B., Skogstad, A., Gjerstad, J., & Einarsen, S. V. (2019). Are transformational and laissez-faire leadership related to state anxiety among subordinates? A two-wave prospective study of forward and reverse associations. *Work & Stress*, *33* (2), 137–155. https://doi.org/10.1080/02678373.2018.1528307

Nkomo, S. M., & Kriek, D. (2011). Leading organizational change in the 'new' South Africa: Leading organizational change in the 'new' South Africa. *Journal of Occupational and Organizational Psychology*, *84* (3), 453–470. https://doi.org/10.1111/j.2044-8325.2011.02020.x

Nyambegera, S. M. (2002). Ethnicity and human resource management practice in sub-Saharan Africa: The relevance of managing the diversity discourse. *The International Journal of Human Resource Management*, *13* (7), 1077–1090. https://doi.org/10.1080/09585190210131302

Olson, K., Smyth, J. D., Horwitz, R., Keeter, S., Lesser, V., Marken, S., Mathiowetz, N. A., McCarthy, J. S., O'Brien, E., Opsomer, J. D., Steiger, D., Sterrett, D., Su, J., Suzer-Gurtekin, Z. T., Turakhia, C., & Wagner, J. (2021). Transitions from telephone surveys to self-administered and mixed-mode surveys: Aapor task force report. *Journal of Survey Statistics and Methodology*, *9*(3), 381–411. https://doi.org/10.1093/jssam/smz062

Oppong, N. Y. (2013). Towards African work orientations: Guide from Hofstede's cultural dimensions. *European Journal of Business and Management*, 11.

Owens, B. P., & Hekman, D. R. (2012). Modeling how to grow: An inductive examination of humble leader behaviors, contingencies, and outcomes. *Academy of Management Journal*, *55* (4), 787–818. https://doi.org/10.5465/amj.2010.0441

Ozanne, L. K., Chowdhury, M., Prayag, G., & Mollenkopf, D. A. (2022). SMEs navigating COVID-19: The influence of social capital and dynamic capabilities on organizational resilience. *Industrial Marketing Management*, *104*, 116–135. https://doi.org/10.1016/j.indmarman.2022.04.009

Pal, R., Torstensson, H., & Mattila, H. (2014). Antecedents of organizational resilience in economic crises—An empirical study of Swedish textile and clothing SMEs. *International Journal of Production Economics*, *147*, 410–428. https://doi.org/10.1016/j.ijpe.2013.02.031

Peterson, R. S. (1997). A directive leadership style in group decision making can be both virtue and vice: evidence from elite and experimental groups. *Journal of Personality and Social Psychology, Vol. 72, No-5, 1107-1121*, 15.

Pitichat, T., Reichard, R. J., Kea-Edwards, A., Middleton, E., & Norman, S. M. (2018). Psychological capital for leader development. *Journal of Leadership & Organizational Studies*, *25*(1), 47–62. https://doi.org/10.1177/1548051817719232

Podsakoff, P. M., MacKenzie, S. B., & Bommer, W. H. (1996). Transformational leader behaviors and substitutes for leadership as determinants of employee satisfaction, commitment, trust, and organizational citizenship behaviors. *Journal of Management*, *22*(2), 259–298. https://doi.org/10.1177/014920639602200204

Podsakoff, P. M., MacKenzie, S. B., Lee, J.-Y., & Podsakoff, N. P. (2003). Common method biases in behavioral research: A critical review of the literature and recommended remedies. *Journal of Applied Psychology*, *88*(5), 879–903. https://doi.org/10.1037/0021-9010.88.5.879

Pornprasertmanit, S., Lee, J., & Preacher, K. J. (2014). Ignoring clustering in confirmatory factor analysis: some consequences for model fit and standardized parameter estimates. *Multivariate Behavioral Research*, *49* (6), 518–543. https://doi.org/10.1080/00273171.2014.933762

Preacher, K. J., Rucker, D. D., & Hayes, A. F. (2007). Addressing moderated mediation hypotheses: theory, methods, and prescriptions. *Multivariate Behavioral Research*, *42*(1), 185–227. https://doi.org/10.1080/00273170701341316

Preacher, K. J., Zyphur, M. J., & Zhang, Z. (2010). A general multilevel SEM framework for assessing multilevel mediation. *Psychological Methods*, *15* (3), 209–233. https://doi.org/10.1037/a0020141

Pyc, L. S., Meltzer, D. P., & Liu, C. (2017). Ineffective leadership and employees' negative outcomes: The mediating effect of anxiety and depression. *International Journal of Stress Management*, *24*(2), 196–215. https://doi.org/10.1037/str0000030

Rafferty, A. E., & Restubog, S. L. D. (2011). The Influence of abusive supervisors on followers' organizational citizenship behaviours: The hidden costs of abusive supervision: hidden costs of abusive supervision. *British Journal of Management*, *22* (2), 270–285. https://doi.org/10.1111/j.1467-8551.2010.00732.x

Rappaport, L. M., Amstadter, A. B., & Neale, M. C. (2019). Model fit estimation for multilevel structural equation models. *Structural Equation Modeling: A*

Multidisciplinary Journal. https://www.tandfonline.com/doi/full/10.1080/10705511.2019.1620109

Ryu, E., & West, S. G. (2009). Level-specific evaluation of model fit in multilevel structural equation modeling. *Structural Equation Modeling: A Multidisciplinary Journal, 16* (4), 583–601. https://doi.org/10.1080/10705510903203466

Sawalha, I. H. S. (2015). Managing adversity: Understanding some dimensions of organizational resilience. *Management Research Review, 38* (4), 346–366. https://doi.org/10.1108/MRR-01-2014-0010

Schuckert, M., Kim, T. T., Paek, S., & Lee, G. (2018). Motivate to innovate: How authentic and transformational leaders influence employees' psychological capital and service innovation behavior. *International Journal of Contemporary Hospitality Management, 30* (2), 776–796. https://doi.org/10.1108/IJCHM-05-2016-0282

Senbeto, D. L., & Hon, A. H. Y. (2020). Market turbulence and service innovation in hospitality: Examining the underlying mechanisms of employee and organizational resilience. *The Service Industries Journal, 40* (15–16), 1119–1139. https://doi.org/10.1080/02642069.2020.1734573

Shani, O. (2020). Organizational resilience: antecedents, consequences, and practical implications – for managers and change leaders*. In D. A. Noumair & A. B. (Rami) Shani (Eds.), *Research in Organizational Change and Development* (Vol. 28, pp. 127–158). Emerald Publishing Limited. https://doi.org/10.1108/S0897-301620200000028005

Shockley, K. M., Clark, M. A., Dodd, H., & King, E. B. (2020). *Work-family strategies during COVID-19: Examining Gender dynamics among dual-earner couples with young children*. 15.

Simms, C., McGowan, P., Pickernell, D., Vazquez-Brust, D., & Williams, A. (2022). Uncovering the effectual-causal resilience nexus in the era of Covid-19: A case of a food sector SME's resilience in the face of the global pandemic. *Industrial Marketing Management, 106*, 166–182. https://doi.org/10.1016/j.indmarman.2022.08.012

Sommer, S. A., Howell, J. M., & Hadley, C. N. (2016). Keeping positive and building strength: the role of affect and team leadership in developing resilience during an organizational crisis. *Group & Organization Management, 41* (2), 172–202.

Srivastava, S., Pradhan, S., Singh, L. B., & Madan, P. (2022). Consequences of abusive supervision on Indian service sector professionals: A PLS-SEM-based approach. *International Journal of Conflict Management, 33* (4), 613–636. https://doi.org/10.1108/IJCMA-07-2021-0112

Stata. (2022). *Nonlinear multilevel mixed-effects models*. https://www.stata.com/features/overview/nonlinear-multilevel-mixed-effects-models/

Stoker, J. I., Garretsen, H., & Soudis, D. (2019). Tightening the leash after a threat: A multi-level event study on leadership behavior following the financial crisis. *The Leadership Quarterly, 30* (2), 199–214. https://doi.org/10.1016/j.leaqua.2018.08.004

Stone, T. H., & Jawahar, I. M. (2021). A leadership model for high-intensity organizational contexts. *Management Research Review, 44* (8), 1199–1216. https://doi.org/10.1108/MRR-06-2020-0324

Stoop, I. A. L. (2005). *The Hunt for the Last Respondent: Nonresponse in Sample Surveys*. Sociaal en Cultureel Planbu.

Stoverink, A. C., Kirkman, B. L., Mistry, S., & Rosen, B. (2020). Bouncing Back together: toward a theoretical model of work team resilience. *Academy of Management Review, 45* (2), 395–422. https://doi.org/10.5465/amr.2017.0005

Sullivan-Taylor, B., & Branicki, L. (2011). Creating resilient SMEs: Why one size might not fit all. *International Journal of Production Research, 49* (18), 5565–5579. https://doi.org/10.1080/00207543.2011.563837

Tasic, J., Amir, S., Tan, J., & Khader, M. (2020). A multilevel framework to enhance organizational resilience. *Journal of Risk Research, 23* (6), 713–738. https://doi.org/10.1080/13669877.2019.1617340

Teo, W. L., Lee, M., & Lim, W.-S. (2017). The relational activation of resilience model: How leadership activates resilience in an organizational crisis. *Journal of Contingencies and Crisis Management, 25* (3), 136–147. https://doi.org/10.1111/1468-5973.12179

Tepper, B. J. (2000). Consequences of abusive supervision. *Academy of Management Journal*, *43*(2), 178–190. https://doi.org/10.5465/1556375

Tepper, B. J., Duffy, M. K., & Shaw, J. D. (2001). Personality moderators of the relationship between abusive supervision and subordinates' resistance. *Journal of Applied Psychology*, *86* (5), 974–983. https://doi.org/10.1037/0021-9010.86.5.974

Tepper, B. J., Moss, S. E., Lockhart, D. E., & Carr, J. C. (2007). Abusive supervision, upward maintenance communication, and subordinates' psychological distress. *Academy of Management Journal*, 13.

Tepper, B. J., Simon, L., & Park, H. M. (2017). Abusive Supervision. *Annual Review of Organizational Psychology and Organizational Behavior*, *4*(1), 123–152. https://doi.org/10.1146/annurev-orgpsych-041015-062539

Tongco, Ma. D. C. (2007). Purposive sampling as a tool for informant selection. *ethnobotany research and applications*, *5*, 147. https://doi.org/10.17348/era.5.0.147-158

Tourish, D. (2013). *The dark side of transformational leadership: A critical perspective*. Routledge. https://doi.org/10.4324/9780203558119

Trougakos, J. P., Chawla, N., & McCarthy, J. M. (2020). Working in a pandemic: Exploring the impact of COVID-19 health anxiety on work, family, and health outcomes. *Journal of Applied Psychology*, *105* (11), 1234–1245. https://doi.org/10.1037/apl0000739

Tucci, J., & Clouse, W. (2005). *The Entrepreneurial Executive*. *10*, 116.

Vakilzadeh, K., & Haase, A. (2020). The building blocks of organizational resilience: A review of the empirical literature. *Continuity & Resilience Review*. https://doi.org/10.1108/CRR-04-2020-0002

Valero, J. N., Jung, K., & Andrew, S. A. (2015). Does transformational leadership build resilient public and nonprofit organizations? *Disaster Prevention and Management*, *24* (1), 4–20. https://doi.org/10.1108/DPM-04-2014-0060

Van Wart, M., & Kapucu, N. (2011). Crisis management competencies: The case of emergency managers in the USA. *Public Management Review*, *13* (4), 489–511. https://doi.org/10.1080/14719037.2010.525034

Vogus, T. J., & Sutcliffe, K. M. (2007). Organizational resilience: Towards a theory and research agenda. *2007 IEEE International Conference on Systems, Man and Cybernetics*, 3418–3422. https://doi.org/10.1109/ICSMC.2007.4414160

Vossen, R. W. (1998). Relative strengths and weaknesses of small firms in innovation. *International Small Business Journal*, *16* (3), 88–94. https://doi.org/10.1177/0266242698163005

Waldman, D. A., & Yammarino, F. J. (1999). CEO charismatic leadership: Levels-of-management and levels-of-analysis effects. *Academy of Management Review*, *24* (2), 266–285. https://doi.org/10.5465/amr.1999.1893936

Walker, D., Beasley, M., Newman, I., & Schumacker, R. (2010). *Multiple Linear Regression Viewpoints*. http://www.glmj.org/archives/MLRV_2010_36_1.pdf#page=19

Wanberg, C. R., Csillag, B., Douglass, R. P., Zhou, L., & Pollard, M. S. (2020). Socioeconomic status and well-being during COVID-19: A resource-based examination. *Journal of Applied Psychology*, *105* (12), 1382–1396. https://doi.org/10.1037/apl0000831

Whitman, Z., Kachali, H., Roger, D., Vargo, J., & Seville, E. (2013). Short-form version of the Benchmark Resilience Tool (BRT-53). *Measuring Business Excellence*, *17*. https://doi.org/10.1108/MBE-05-2012-0030

Wibowo, A., & Paramita, W. (2022). Resilience and turnover intention: The role of mindful leadership, empathetic leadership, and self-regulation. *Journal of Leadership & Organizational Studies*, *29* (3), 325–341. https://doi.org/10.1177/15480518211068735

Wooten, L. P., & James, E. H. (2008). Linking crisis management and leadership competencies: The role of human resource development. *Advances in Developing Human Resources*, *10* (3), 352–379. https://doi.org/10.1177/1523422308316450

World Bank. (2021). *Socioeconomic Impacts of COVID-19 in Kenya on Firms: Rapid Response Phone Survey, Round 1*. https://openknowledge.worldbank.org/handle/10986/35172?locale-attribute=en

Wu, W.-Y., & Nguyen, K.-V. H. (2019). The antecedents and consequences of psychological capital: A meta-analytic approach. *Leadership & Organization*

Development Journal, *40*(4), 435–456. https://doi.org/10.1108/LODJ-06-2018-0233

Xanthopoulou, D., Bakker, A. B., Demerouti, E., & Schaufeli, W. B. (2007). The role of personal resources in the job demands-resources model. *International Journal of Stress Management*, *14* (2), 121–141. https://doi.org/10.1037/1072-5245.14.2.121

Yan, J., Kim, S., Zhang, S. X., Foo, M.-D., Alvarez-Risco, A., Del-Aguila-Arcentales, S., & Yáñez, J. A. (2021). Hospitality workers' COVID-19 risk perception and depression: A contingent model based on transactional theory of stress model. *International Journal of Hospitality Management*, *95*, 102935. https://doi.org/10.1016/j.ijhm.2021.102935

Yun, S., Faraj, S., & Sims Jr, H. P. (2005). Contingent leadership and effectiveness of trauma resuscitation teams. *Journal of Applied Psychology*, *90* (6), 1288.

VT OMNES VNVM SINT

Appendices

Appendix I: Introductory Letter

4th February 2022

Dear sir/madam,

I am Faith Njaramba, a doctoral student at Strathmore University. I am carrying out a study on Organizational Resilience of Small and Medium Sized enterprises in the face of COVID-19 disruptions. In line with this study, I am collecting data on leadership styles, employees' psychological capital, fear of COVID-19 and organizational resilience of SMEs in Kenya.

I will greatly recognize your sacrifice to complete your questionnaire. This questionnaire should take about 20 minutes of your time at most to complete. Your responses will be treated with utmost confidentiality. You are advised to kindly fill in the questionnaires as it applies to you, there are no desirable answers. In case of any queries, kindly contact me on fnjaramba@strathmore.edu or 0716112149. Thank you for your assistance.

Yours sincerely



Faith Njaramba.

Appendix II: Questionnaire for use by SME Employees

The purpose of this questionnaire is to collect data for a study on Leadership styles, Employees' psychological capital, Fear of COVID-19 and Organizational Resilience of Small and Medium Sized Enterprises. This data will be used for academic purposes only and your responses will be confidential. Your cooperation in filling in this questionnaire is appreciated. Kindly rate each statement frankly based on the current situation in your workplace and independent of all other statements.

Section 1: Background Information

A. About your company

1. Name of organization_____(Optional)
2. How long has the organization been in operation? _____years or since_____
3. What economic activity is your firm involved in? _____
4. What sector does the organization operate in? (Circle your choice in the options below).
    a. Service
    b. Industrial
    c. Agricultural/ mining
5. What is the size of the organization?
    a) Number of employees:
        a. _____full time employees
        b. _____part time employees
    b) Monthly turnover of: (Circle your choice in the options below).
        a. less than Ksh 50,000
        b. Ksh 50,001 to 200,000
        c. Ksh 200,001 to 1,000,000
        d. Greater than Ksh 1,000,000
6. What is the current mode of working in your organization? (Circle your choice in the options below).

a) Remote working
b) Physically working at the office
c) Hybrid of remote and physical working

7. What is the ownership structure of your organization? (Circle your choice in the options below).
    a) Family owned
    b) Partnership
    c) Group owned
    d) Cooperative
    e) Private limited company
    f) Public limited company
8. Does your organization have back-up information technology facilities?
    a. Yes
    b. No
9. How would you describe your firm's current growth trajectory?
    a. Growing rapidly
    b. Growing slowly
    c. Neither growing nor declining
    d. Slowly declining
    e. Rapidly declining
    f. Don't know
10. How would you rate your organization's profitability?
    a. Highly profitable
    b. Moderately profitable
    c. Breaking even
    d. Unprofitable
    e. Don't know
11. Please rate how severe COVID-19 crisis was for your organization.
    a. We dealt with it as part of business as usual
    b. It challenged us but we came out stronger than before
    c. It challenged as but was not overly disruptive

d. It definitely challenged us and was moderately disruptive
e. It could have shut us down permanently
f. Don't know
g. Not applicable

B. About yourself

1. Gender (Please tick the appropriate)
    a. Male _____
    b. Female_____
2. Age (circle your choice in the options below).
    a) 18-34
    b) 35-39
    c) 40-49
    d) 50-59
    e) Above 60
3. Highest level of education (circle your choice in the options below).
    a) Postgraduate degree
    b) Undergraduate degree
    c) Diploma
    d) Certificate
    e) Other…….....
4. Do you have a role in the following functions of your organization? (Tick all that apply)
    a. Risk management
    b. Crisis management
    c. Emergency management
    d. Other_____ (Please specify).
5. Which of these levels best describes your position within your firm? (Circle your choice in the options below).
    a. Senior management
    b. Middle management
    c. Supervisor
    d. Lower-level staff

VT OMNES UNUM SINT

6. What is your job title? _____
7. Tenure within the organization _____years or since_____ (use the firm you were working in the year 2020).
8. How long have you worked within your industry?
    a. 1-5 years
    b. 6-10 years
    c. 11-20 years
    d. More than 20 years

Section 2: Leadership Styles

The statements below describe the leadership style of your boss as you perceive it. Please answer all items on this answer sheet. If an item is irrelevant, or if you are unsure or do not know the answer, leave the answer blank.

Name (optional) and designation of the boss you are rating_____

1. Kindly indicate the extent to which you agree or disagree to the statements below on leadership style of your boss on a scale of 1-5 by ticking in the appropriate space. Where 1 means Disagree strongly, 2 is Disagree a little, 3 is Neither agree nor disagree, 4 is Agree a little and 5 is Agree strongly.

Transformational Leadership					
Statement	**Scale**				
	1	**2**	**3**	**4**	**5**
Idealized Influence					
1. Idealized 1					
2. Idealized 2					
3. Idealized 3					
4. Idealized 4					
5. Idealized 5					
6. Idealized 6					
7. Idealized 7					
8. Idealized 8					
Inspirational Motivation					
9. Inspirational 1					
10. Inspirational 2					
11. Inspirational 3					
On this item, please check 5					
12. Inspirational 4					
Intellectual stimulation					
13. Intellectual 1					

VT OMNES VNVM SINT

14. Intellectual 2					
15. Intellectual 3					
16. Intellectual 4					
Individualized consideration					
17. Individualized 1					
18. Individualized 2					
19. Individualized 3					
20. Individualized 4					

2. Kindly indicate the extent to which you agree or disagree to the statements below on leadership style of your boss on a scale of 1-5 by ticking in the appropriate space. Where 1 means extremely disagree, 2 means moderately disagree, 3 means slightly disagree, 4 means agree slightly, 4 means moderately agree, and 5 means extremely agree.

Statement	**Scale**				
Directive leadership	**1**	**2**	**3**	**4**	**5**
Expects me to follow his/her instructions precisely					
Motivates me by letting them know what will happen to me if my work is unsatisfactory					
Requires me to submit detailed reports of my work activities					
Makes most work-related decisions for me					
Supervises me very closely					
Has to lay out goals and guidelines, otherwise I will be passive and get nothing accomplished					

Expects me to carry out instructions immediately					

3. Kindly rate the behavior of your boss on a five-point response scale where 1 was "I cannot remember him/her ever using this behavior with me," 2 was "He/she very seldom uses this behavior with me," 3 was "He/she occasionally uses this behavior with me," 4 was "He/she uses this behavior moderately often with me," and 5 was" He/she uses this behavior very often with me."

Abusive supervision

Statement	**Scale**				
My boss:	**1**	**2**	**3**	**4**	**5**
Ridicules me					
Tells me my thoughts or feelings are stupid					
Gives me the silent treatment					
Puts me down in front of others					
Invades my privacy					
Reminds me of my past mistakes and failures					
Doesn't give me credit for jobs requiring a lot of effort					
Blames me to save himself/herself embarrassment					
Breaks promises he/she makes					
Expresses anger at me when he/she is mad for another reason					
Makes negative comments about me to others					
Is rude to me					

Does not allow me to interact with my coworkers					
Tells me I'm incompetent					
Lies to me					

Section 3: Psychological Capital

1. Below are statements that describe how you may think about yourself right now. Use the following scales to indicate your level of agreement or disagreement with each statement. Where 1 is Disagree strongly, 2 is Disagree a little, 3 is Neither agree nor disagree, 4 is Agree a little and 5 is Agree strongly.

Statement	**Scale**				
	1	**2**	**3**	**4**	**5**
Efficacy					
1. Efficacy 1					
2. Efficacy 2					
3. Efficacy 3					
4. Efficacy 4					
5. Efficacy 5					
6. Efficacy 6					
Optimism					
7. Optimism 1					
8. Optimism 2					
9. Optimism 3					
10. Optimism 4					
Statement	**1**	**2**	**3**	**4**	**5**
11. Optimism 5					
On this item, please check 4					
12. Optimism 6					

13. Optimism 7 **Reverse coded**					
Resilience					
14. Resilience 1					
15. Resilience 2					
16. Resilience 3					
17. Resilience 4					
18. Resilience 5					
Hope					
19. Hope 1					
20. Hope 2 **Reverse coded**					
21. Hope 3					
22. Hope 4					
23. Hope **Reverse coded**					
24. Hope					

Section 4: Fear of Covid-19

1. Kindly indicate your level of agreement or disagreement with the following statements on how you view the COVID-19 pandemic on a Likert scale of 1-5. Where 1 means strongly disagree, 2 means disagree, 3 means somehow agree, 4 means agree and 5 means strongly agree.

Statement	**Scale**				
	1	**2**	**3**	**4**	**5**
I am most afraid of coronavirus-19					
It makes me uncomfortable to think about coronavirus-19					
My hands become clammy when I think about coronavirus-19					
I am afraid of losing my life because of coronavirus-19					

When watching news and stories about coronavirus-19 on social media, I become nervous or anxious					
I cannot sleep because I'm worrying about getting coronavirus-19					
My heart races or palpitates when I think about getting coronavirus-19					

Section 5: Organizational Resilience

1. Kindly indicate the extent to which you agree or disagree to the statements below on organizational resilience on a scale of 1-5 by ticking in the appropriate space. Where 0 means Not at all, 1 means Once in a while, 2 means Sometimes, 3 means Fairly often, 4 means Frequently, if not always.

Statement	**Scale**				
	1	**2**	**3**	**4**	**5**
Planning					
We are mindful of how a crisis could affect us					
We believe emergency plans must be practiced and tested to be effective					
We are able to shift rapidly from business-as-usual to respond to crises					
We build relationships with organizations we might have to work with in a crisis					
Our priorities for recovery would provide direction for staff in a crisis					
Adaptive capacity					
There is a sense of teamwork and camaraderie in our organization					

Our organization maintains sufficient resources to absorb some unexpected change					
People in our organization ‘‘own’’ a problem until it is resolved					
Staff have the information and knowledge they need to respond to unexpected problems					
Managers in our organization lead by example					
On this item, please check 1					
Staff are rewarded for ‘‘thinking outside the box’’					
Our organization can make tough decisions quickly					
Managers actively listen for problems					

End

Appendix III: Distribution of Licensed SMES per County

County	Distribution of Small Enterprises '00	Distribution of Medium sized enterprises '00
Nairobi	163.97734	1.52929
Nakuru	73.12503	0.87388
Kiambu	87.528445	0.764645
Kisumu	146.25006	2.40317
Kakamega	70.90912	1.09235
Mombasa	96.392085	0.65541
Kajiado	74.232985	0.983115
Uasin Ngishu	62.04548	0.21847
Migori	89.744355	0.327705
Machakos	86.42049	0.43694
Homa Bay	65.369345	0.546175
Kericho	140.710285	1.52929
Meru	25.482965	0.21847
Kisii	88.6364	0.764645
Narok	77.55685	0.983115
Nyamira	40.994335	0.21847
Taita Taveta	48.75002	1.52929
Bungoma	76.448895	0.327705
Kilifi	31.02274	0.764645
Embu	50.96593	0.327705
Kirinyaga	31.02274	0.327705
Kwale	59.82957	1.201585
Mandera	36.562515	1.201585
Nyeri	21.051145	0.65541
Trans-nzoia	42.10229	0.65541
Nyandarua	35.45456	0.764645

Busia	16.619325	0.983115
Nandi	52.073885	0.327705
Makueni	24.37501	0.109235
Baringo	40.994335	0
Bomet	45.426155	0
Laikipia	39.88638	0
Turkana	70.90912	0
Vihiga	43.210245	0.109235
Muranga	28.80683	0.43694
Kitui	27.698875	0
Siaya	24.37501	0.65541
Samburu	56.505705	0
Tharaka	40.994335	0
Lamu	32.130695	0.21847
Elgeyo Marakwet	35.45456	0
Isiolo	58.721615	0.87388
Garissa	31.02274	0
Marsabit	56.505705	0.327705
West Pokot	27.698875	0
Tana River	32.130695	1.31082
Wajir	8.86364	0

Appendix IV: Authorization to use Copyrighted Measurement Tools

1. Benchmark Resilience Tool

New BRT Application Form External Inbox ×

Louise Home-Dewar <louise.homedewar@resorgs.org.nz> Fri, Apr 9, 8:01 AM
to me

Hi

Thanks for your application to use the BRT. We confirm that we are happy for you to use it for your research.

I have attached the survey for the tool and coding information to assist you in your analysis.

Look forward to seeing the results of your research in your final report in due course.

Kind regards
Louise

Resilient ORGANISATIONS

Louise Home-Dewar
Office Manager
p: 021 259 6993
e : louise.homedewar@resorgs.org.nz
w: www.resorgs.org.nz

2 Attachments

2. Multifactor Leadership Questionnaire to measure Transformational Leadership.



For use by Daniel Skarlicki only. Received from Mind Garden, Inc. on April 25, 2021
Permission for Daniel Skarlicki to reproduce 400 copies within three years of April 25, 2021

Multifactor Leadership Questionnaire™

Instrument (Leader and Rater Form)

and Scoring Guide
(Form 5X-Short)

by Bruce Avolio and Bernard Bass

Published by Mind Garden, Inc.

info@mindgarden.com
www.mindgarden.com

Appendix V: Timeline of Activities

Time period	Activity	Pattern of events
1. December 2020- April 2021	Proposal writing stage.	Sequential
2. April 2021	Submission of intention to defend.	Sequential
3. 31st May 2021	Proposal submission.	Sequential
4. July 2021	Proposal defense.	Sequential
5. July -Sept 2021	Proposal fine tuning.	Sequential
6. Oct- January 2022	Application for ethical approval licenses for data collection.	Sequential
7. February- August 2022	1. Pilot data collection and analysis- 14th -21st Feb 2022 2. Main data collection and analysis- 21st Feb to 31st August 2022. **Data collection fora.** 1. Connecting Kenyan Businesses to Africa Market - by KEPSA Ajira Digital Program- 25th February 2022. 2. The USA- Kenya SME trade initiative launch - by KEPSA Business Hub- 8th March 2022. 3. 'Business Intelligence for SMEs' - by KEPSA Ajira Digital Program Friday, March 11, 2022. 4. The SMEs conference and Expo 3rd Edition – by Kenya National Chamber of Commerce & Industry- 24-26th March 2022 at KICC. 5. Business Process Automation - by Ajira Digital Program- Friday, March 25, 2022 6. Improving SMEs Operational Efficiency	Sequential

	through Business Process Outsourcing - by Ajira Digital Program - Friday, June 24, 2022. 7. Owner Manager Program referrals - Strathmore University Business School- 7th April 2022. 8. Attachment office visits to students in working in SMEs - Strathmore University Business School- 25th Feb 2022- 31st Aug 2022.	
8. September 2022	Data Analysis, thesis report writing.	Concurrent
9. October-December 2022	Publications writing and submission of thesis for defense.	Concurrent

Appendix VI: SU-IERC Ethical Approval

Strathmore UNIVERSITY

28th January 2022

Ms Njaramba Faith,
fnjaramba@strathmore.edu

Dear Ms Njaramba,

RE: Influence of Leadership Styles, Employee Psychological Capital and Fear of COVID-19 on Organizational Resilience of Small and Medium Sized Enterprises in Kenya

This is to inform you that SU-IERC has reviewed and **approved** your above SU- **PhD** research proposal. Your application reference number is **SU-IERC1243/21**. The approval period is **28th January 2022 to 27th January 2023.**

This approval is subject to compliance with the following requirements:

i. Only approved documents including (informed consents, study instruments, MTA) will be used
ii. All changes including (amendments, deviations, and violations) are submitted for review and approval by SU-IERC.
iii. Death and life-threatening problems and serious adverse events or unexpected adverse events whether related or unrelated to the study must be reported to SU-IERC within 48 hours of notification
iv. Any changes, anticipated or otherwise that may increase the risks or affected safety or welfare of study participants and others or affect the integrity of the research must be reported to SU-IERC within 48 hours
v. Clearance for export of biological specimens must be obtained from relevant institutions.
vi. Submission of a request for renewal of approval at least 60 days prior to expiry of the approval period. Attach a comprehensive progress report to support the renewal.
vii. Submission of an executive summary report within 90 days upon completion of the study to SU-IERC.

Prior to commencing your study, you will be expected to obtain a research license from National Commission for Science, Technology and Innovation (NACOSTI) https://research-portal.nacosti.go.ke/ and also obtain other clearances needed

Yours sincerely,

for: Prof Fred Were,
Chairperson; SU-IERC

Ole Sangale Rd, Madaraka Estate. PO Box 59857-00200, Nairobi, Kenya. Tel +254 (0)703 034000
Email admissions@strathmore.edu www.strathmore.edu

Appendix VII: National Commission for Science, Technology and Innovation Approval

REPUBLIC OF KENYA

NATIONAL COMMISSION FOR SCIENCE, TECHNOLOGY & INNOVATION

Ref No: 747238

Date of Issue: 14/February/2022

RESEARCH LICENSE



This is to Certify that Ms.. Njaramba Faith Njambi of Strathmore University, has been licensed to conduct research in Kiambu, Nairobi, Nakuru on the topic: Influence of leadership styles, employee psychological capital and fear of COVID-19 on organizational resilience of small and medium sized enterprises in Kenya. for the period ending : 14/February/2023.

License No: NACOSTI/P/22/15671

747238

Applicant Identification Number

Director General
NATIONAL COMMISSION FOR SCIENCE, TECHNOLOGY & INNOVATION

Verification QR Code

NOTE: This is a computer generated License. To verify the authenticity of this document, Scan the QR Code using QR scanner application.

Appendix VIII: Modes of Data Collection Means Comparison Tests

Independent Samples Test

		Levene's Test for Equality of Variances		t-test for Equality of Means						
		F	Sig.	t	df	Sig. (2-tailed)	Mean Difference	Std. Error Difference	95% Confidence Interval of the Difference	
									Lower	Upper
OGR	Equal variances assumed	3.350	.068	-.427	600	.669	-.03169	.07420	-.17742	.11404
	Equal variances not assumed			-.435	479.173	.664	-.03169	.07287	-.17487	.11149
TL	Equal variances assumed	2.106	.147	-.771	600	.441	-.04930	.06397	-.17492	.07633
	Equal variances not assumed			-.788	484.027	.431	-.04930	.06260	-.17229	.07370
DL	Equal variances assumed	.815	.367	-1.258	600	.209	-.09896	.07868	-.25349	.05556
	Equal variances not assumed			-1.267	464.140	.206	-.09896	.07810	-.25244	.05451
AS	Equal variances assumed	.784	.376	.215	600	.830	.01704	.07912	-.13834	.17242
	Equal variances not assumed			.217	466.352	.828	.01704	.07841	-.13703	.17111

	Equal variances assumed	.441	.507	-1.552	600	.121	-.08938	.05761	-.20251	.02375
PSY	Equal variances not assumed			-1.563	464.405	.119	-.08938	.05717	-.20172	.02296
	Equal variances assumed	1.318	.251	.255	600	.799	.01722	.06748	-.11531	.14974
CVDF	Equal variances not assumed			.260	477.784	.795	.01722	.06633	-.11312	.14755

Appendix IX: Similarity Report

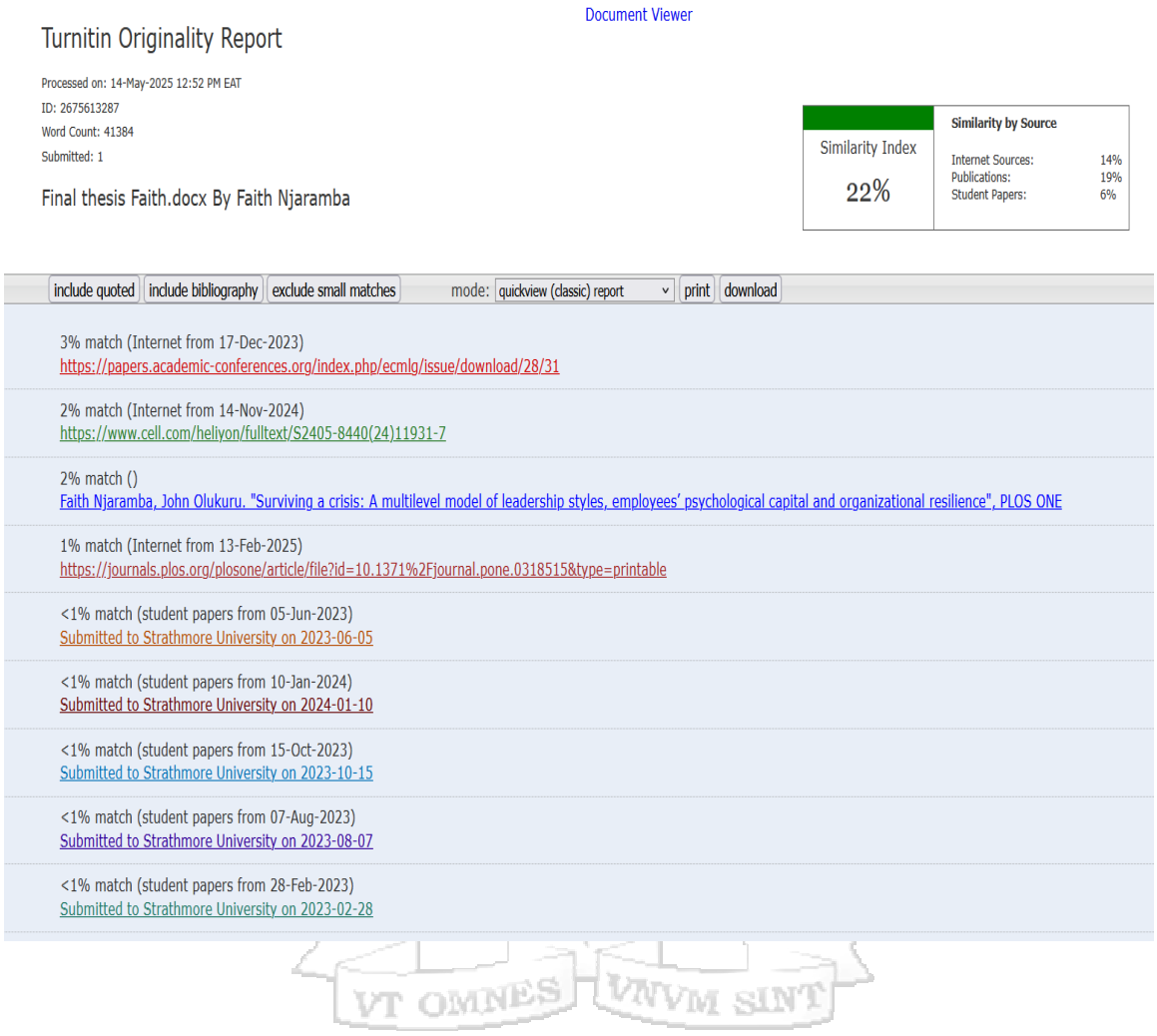

Document Viewer

Turnitin Originality Report

Processed on: 14-May-2025 12:52 PM EAT
ID: 2675613287
Word Count: 41384
Submitted: 1

Final thesis Faith.docx By Faith Njaramba

Similarity Index	Similarity by Source	
22%	Internet Sources:	14%
	Publications:	19%
	Student Papers:	6%

include quoted | include bibliography | exclude small matches | mode: quickview (classic) report | print | download

3% match (Internet from 17-Dec-2023)
https://papers.academic-conferences.org/index.php/ecmlg/issue/download/28/31

2% match (Internet from 14-Nov-2024)
https://www.cell.com/heliyon/fulltext/S2405-8440(24)11931-7

2% match ()
Faith Njaramba, John Olukuru. "Surviving a crisis: A multilevel model of leadership styles, employees' psychological capital and organizational resilience", PLOS ONE

1% match (Internet from 13-Feb-2025)
https://journals.plos.org/plosone/article/file?id=10.1371%2Fjournal.pone.0318515&type=printable

<1% match (student papers from 05-Jun-2023)
Submitted to Strathmore University on 2023-06-05

<1% match (student papers from 10-Jan-2024)
Submitted to Strathmore University on 2024-01-10

<1% match (student papers from 15-Oct-2023)
Submitted to Strathmore University on 2023-10-15

<1% match (student papers from 07-Aug-2023)
Submitted to Strathmore University on 2023-08-07

<1% match (student papers from 28-Feb-2023)
Submitted to Strathmore University on 2023-02-28

VT OMNES VNVM SINT